09/17 cod. 60185202

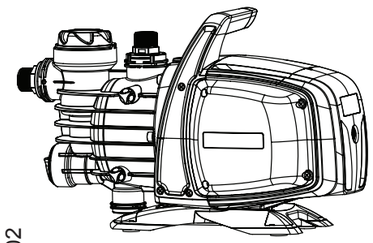

# QUICK GUIDE

## 1

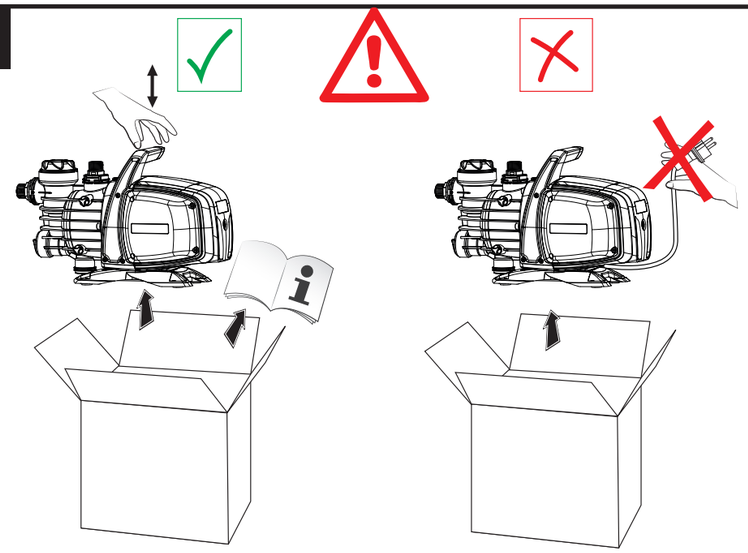

## 2

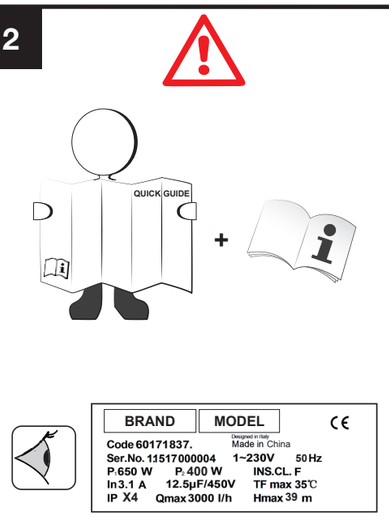


## ON / OFF

P1=910W - P1=1100W
P1=640W - P1=920W

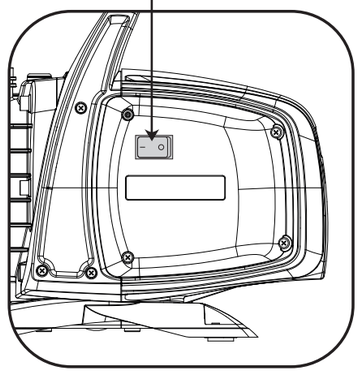

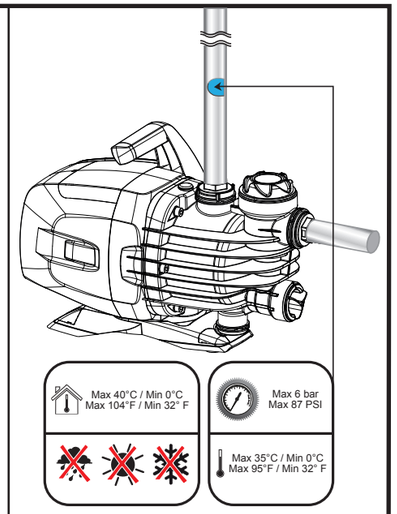


## INSTALLATION

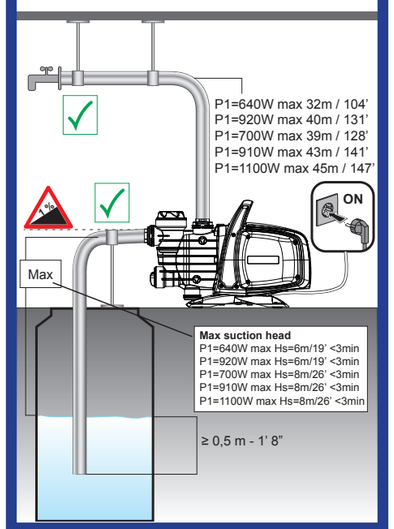


## 3

### INSTALLATION: 1°PORTABLE / 2°FIX

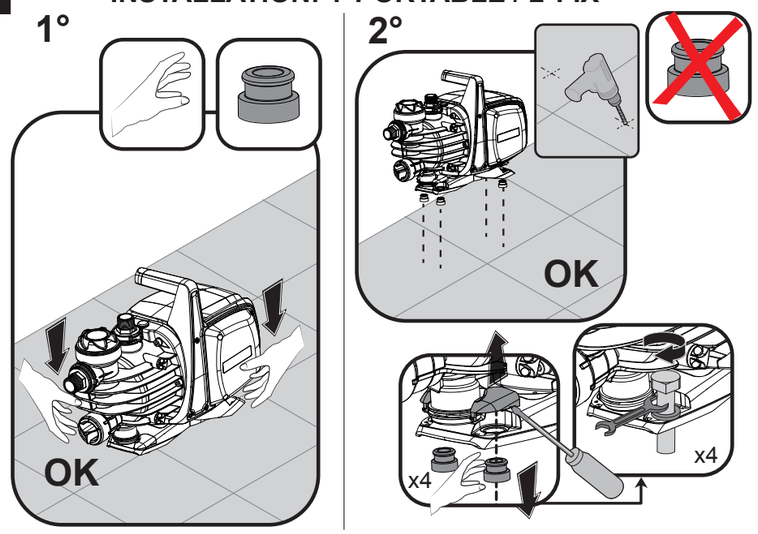


## 4

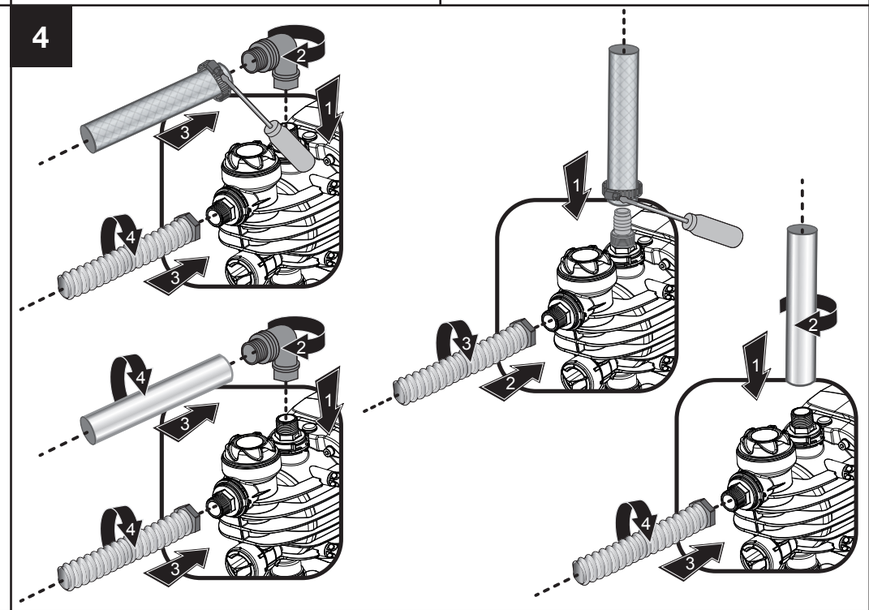

## 5

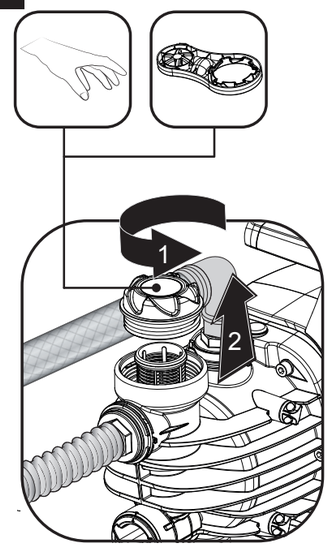

## 6

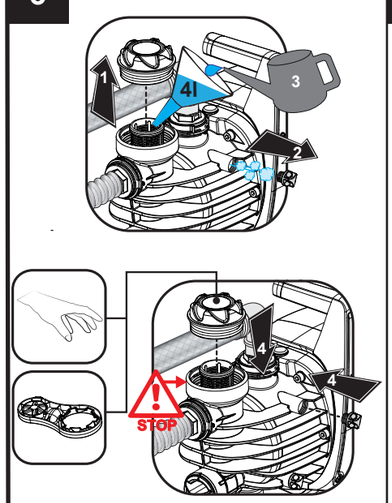


## 7

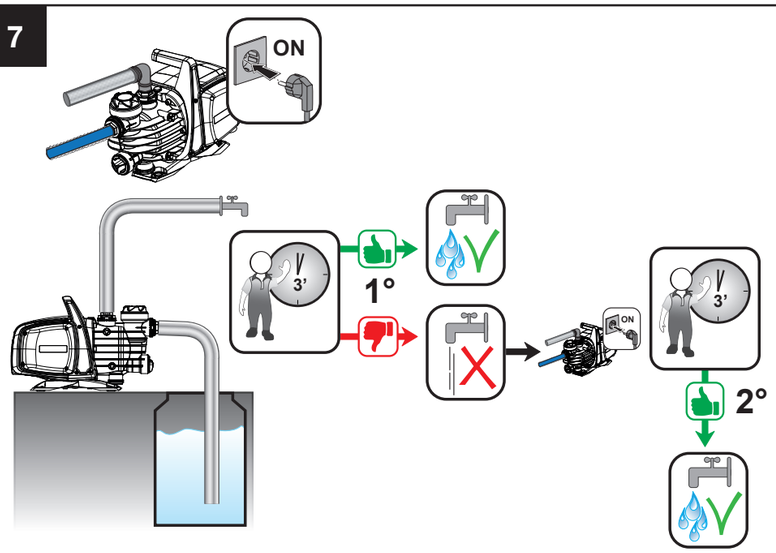

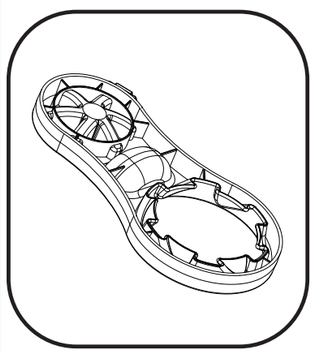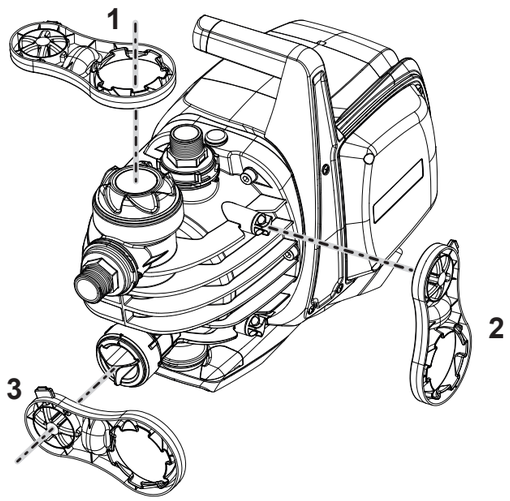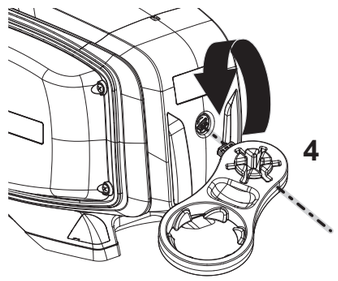
## OPENING