GS series

High Efficiency Single Stage Double Suction Centrifugal Pump

GS SERIES

HIGH EFFICIENCY SINGLE STAGE DOUBLE SUCTION CENTRIFUGAL PUMP

ZHEJIANG LEO CO.,LTD.

Add: Center Avenue, Industrial Park, Wenling, Zhejiang, China

Tel:+86-576-8998 8888

Fax: +86-576-8998 9898

Postcode: 317500

E-mail: export@leogroup.cn

HUNAN LEO CO.,LTD.

Add: Jiuhua Avenue No.9, Jiuhua Industrial Park, Xiangtan, Hunan, China

Tel:+86-731-5858 1111

Fax: +86-731-5559 5369

Postcode: 411201

E-mail: hnleo@leogroup.cn

LEO ZHEJIANG LEO CO.,LTD.

General

The GS series is the third innovative generation of high efficiency double suction pumps, which is developed on the basis of advanced technology both domestic and overseas. The features include wide performance range, superior hydraulic performance, new reasonable structure, high efficiency and high reliability as well as low cavitations and low maintenance cost.

The design, manufacture and quality of this series are in accordance with National Standard GB/T5657 (The Technical Specifications of Centrifugal Pumps Type III). The efficiency rate meets National Standard GB197692 (Energy Efficiency Limit and Energy-saving Evaluation Value of Centrifugal Pumps for Clear Water).

Applications

The products are used to delivery of clear water or other liquids similar to clear water in physical and chemical properties.With anti-corrosion or anti-abrasion material, the pumps are suitable to transfer industrial waste water, sea water and dirty water with little particles.

The products are applicable for supply and drainage systems and cooling systems in iron and steel industry, petrochemical industry, thermo power plants, mines, etc. The pumps are also applied in urban water supply, heating systems, irrigation and water conservation projects.

Working Conditions

Speed: 370 – 2970 rpm

Flow range: 135 - 38,000 m^3/h (Design point)

Head range: 12 - 205 m (Design point)

Liquid temperature: $\leq$80°C (for pumps with standard components); $\leq$150°C (for pumps with bearing and mechanical seal for better cooling & pump casing in material of QT500-7)

Inlet pressure: $\leq$0.3 Mpa (for pumps with standard components); $\leq$0.6 Mpa (for pumps with pump casing in material of QT500-7)

Rotation direction: A clockwise or anticlockwise direction from motor end can be chosen when ordering.

Identification of Codes

GS350-19MA/4

GS - High Efficiency Single Stage Double Suction Centrifugal Pump

350 - Pump Inlet Diameter is 350 mm

19 - 1/10 of Pump Speed at Design Point

M - Modified Impeller (Standard Impeller Without M)

A - Cutting Code of Impeller Outer Diameter (A: 1st Cut; B: 2nd Cut; C: 3rd Cut)

4 - 4 Pole Motor

Structure Features

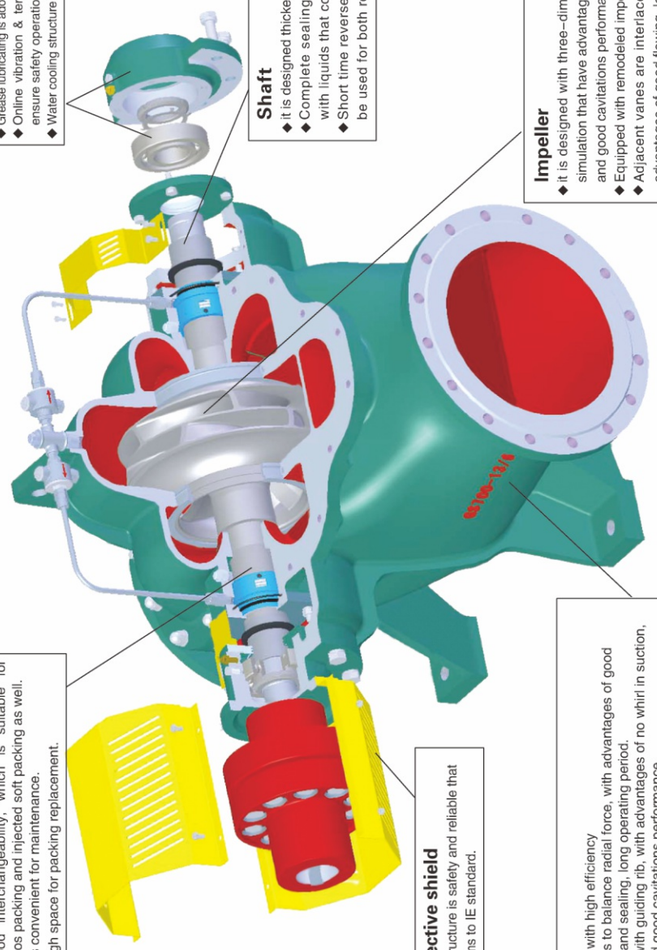

Bearing
- Short span and enlarged diameter design are adopted that have stable operation and long operating period.
- Grease lubricating is adopted for medium & small pump that infuse oil online.
- Online vibration & temperature monitoring devices are provided to ensure safety operation.
- Water cooling structure is suitable for high temperature liquids delivering.

Shaft
- it is designed thicker that has good rigidity and stable operation.
- Complete sealing design is adopted without connecting with liquids that convenient for maintenance.
- Short time reverse rotation is allowable, and the shaft can be used for both rotations.

Impeller
- it is designed with three–dimensional flow theory and CFD calculation & simulation that have advantages of high efficiency, wide high efficiency rang and good cavitations performance.
- Equipped with remodeled impeller that has wide performance range
- Adjacent vanes are interlaced design and V–type discharge that have advantages of good flowing, low pulsation, low vibration and high efficiency.
- The seal ring is stepped designed that have low volume loss.
- Metal mould, digital machining, and accurate roughcast are adopted.

Sealing
- High quality mechanical seals that without any leakage while operating for long time.
- Common structure has good interchangeability, which is suitable for mechanical seal, non–asbestos packing and injected soft packing as well.
- Stainless steel shaft sleeve is convenient for maintenance.
- Split packing cover has enough space for packing replacement.

Protective shield
- Split structure is safety and reliable that conforms to IE standard.

Casing
- Round water chamber design, with high efficiency
- Double volute water chamber is to balance radial force, with advantages of good strength, low force for bearing and sealing, long operating period.
- Suction chamber is designed with guiding rib, with advantages of no whirl in suction, stable operating, noiseless and good cavitations performance.
- Anti–friction and anti–corrosion painting is adopted for suction & discharge flow channel that have low hydraulic loss.
- The pump cover is auto correct that convenient for installing.
- The casing shell is designed with reinforcing rib that has good rigidity andappearance.

Structure Drawing 1

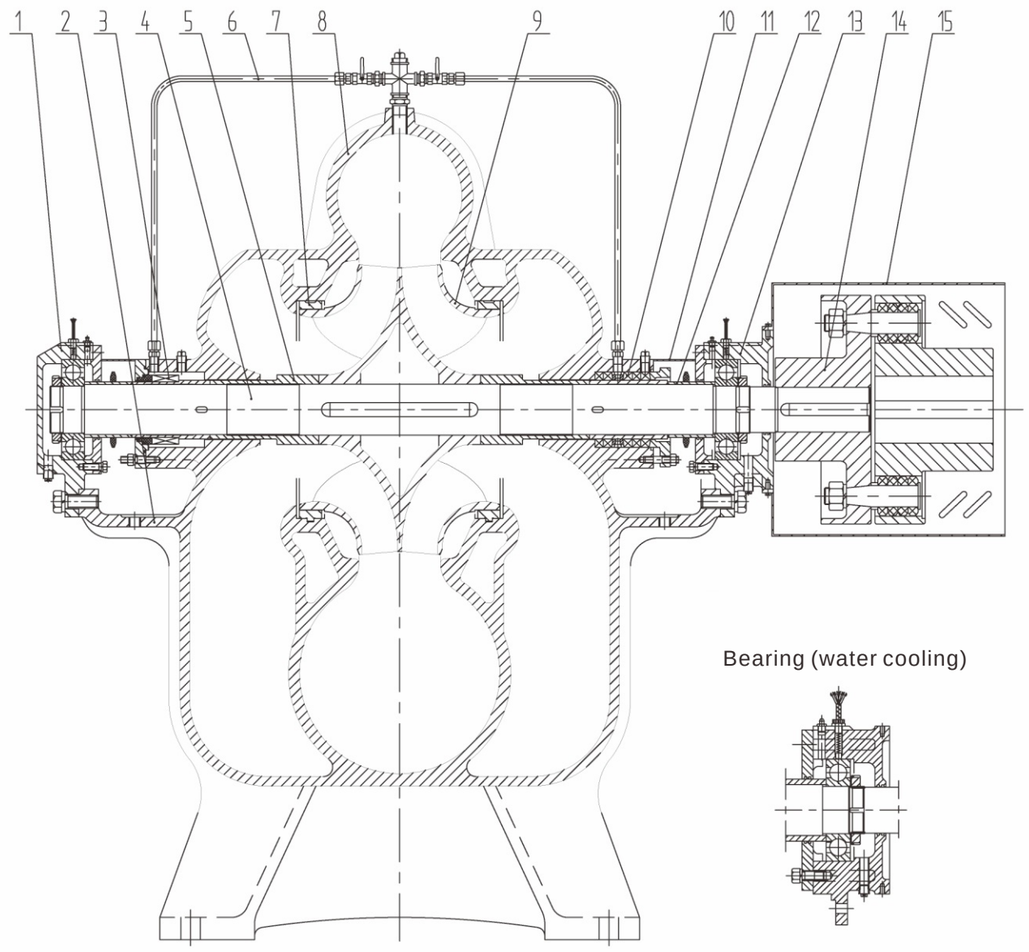

Bearing (water cooling)

1	Bearing Parts B	2	Pump Casing	3	Mechanical Seal Parts ☆	4	Shaft	5	Impeller Resist Sleeve
6	Sealing Pipe Parts	7	Sealing Ring ☆	8	Pump Cover	9	Impeller	10	Packing Seal Parts ☆
11	Protecting Cover	12	Bearing Resist Sleeve	13	Bearing Parts A	14	Coupling Parts	15	Coupling Cover

Remarks: The part with ☆ is wearing part

Structure Drawing 2

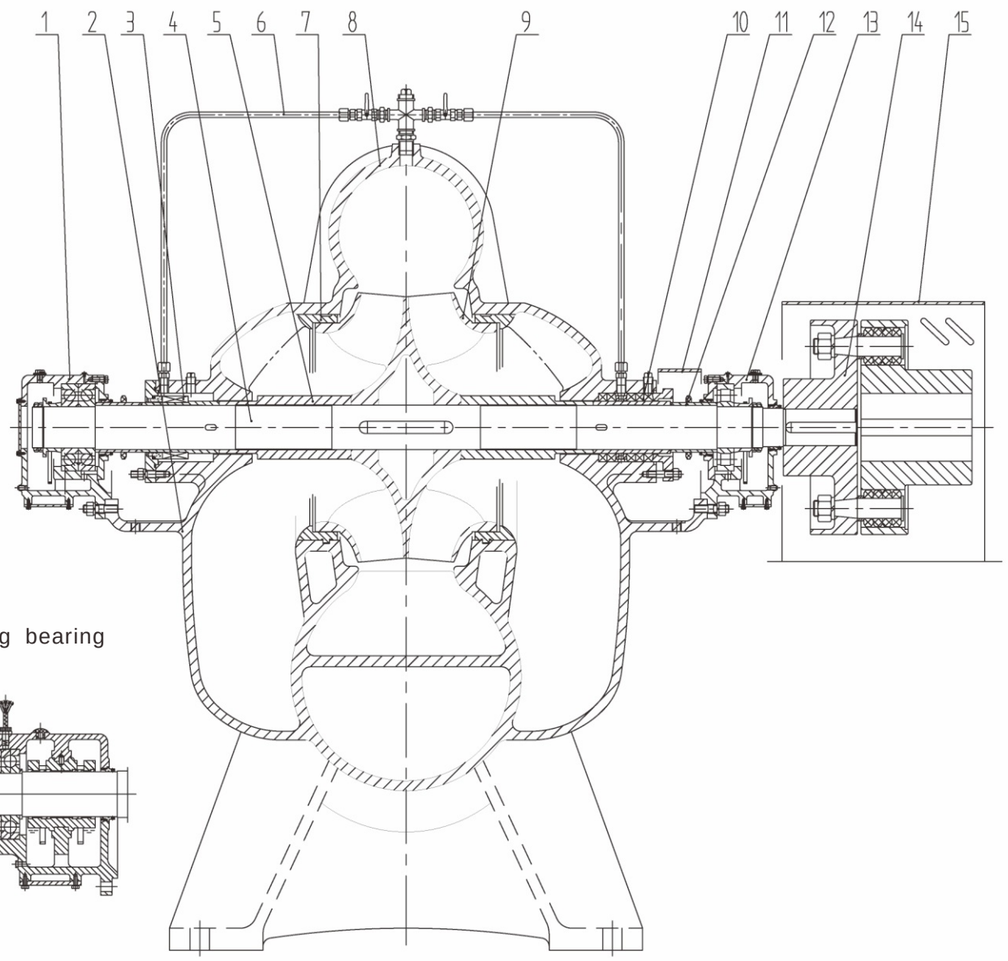

Sliding bearing

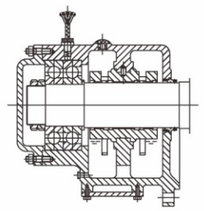

1	Bearing Parts B	2	Pump Casing	3	Mechanical Seal Parts ☆	4	Shaft	5	Impeller Resist Sleeve
6	Sealing Pipe Parts	7	Sealing Ring ☆	8	Pump Cover	9	Impeller	10	Packing Seal Parts ☆
11	Protecting Cover	12	Bearing Resist Sleeve	13	Bearing Parts A	14	Coupling Parts	15	Coupling Cover

Remarks: The part with ☆ is wearing part

Material

Parts Name	Material	Parts Name	Material	Parts Name	Material
Pump Casing	HT250	Impeller	HT250	Sealing Ring	HT250
	QT500–7		ZG1Cr18Ni9		ZG1Cr18Ni9
Pump Cover	HT250	Shaft	40Cr	Shaft Sleeve	45
	QT500–7				1Cr18Ni9

Remarks: Other materials can be selected according to user requirements.

● Standard type：Viewed from motor end，rotation is clockwise.

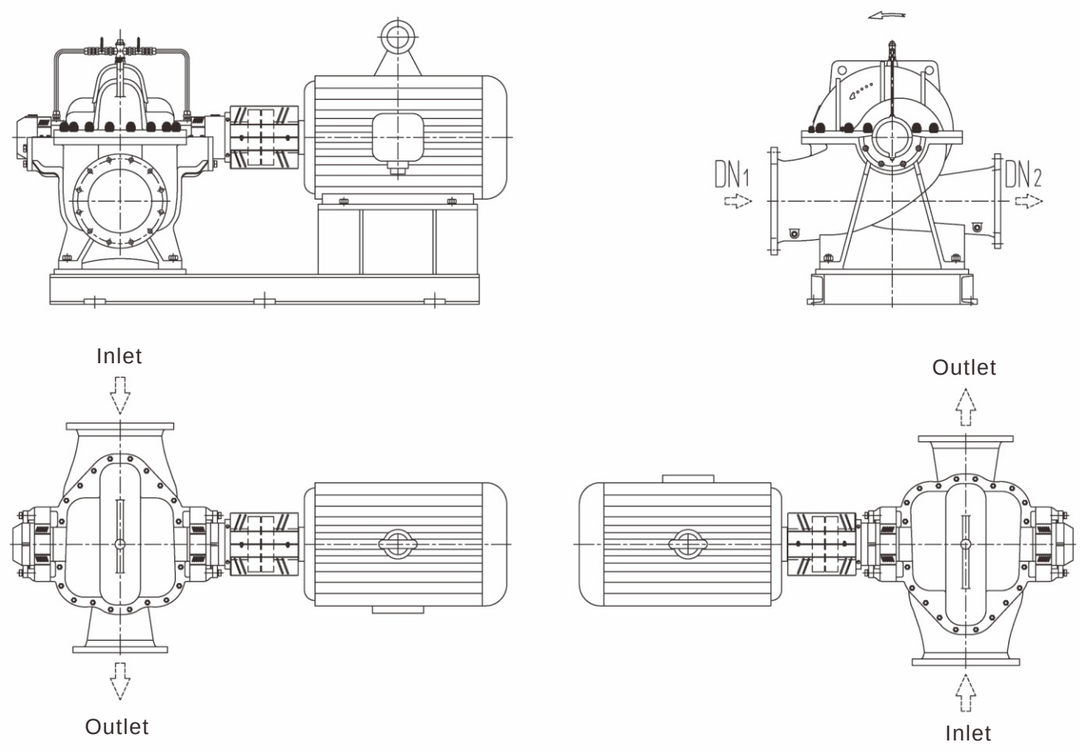

- Special type：Viewed from motor end，rotation is counterclockwise.

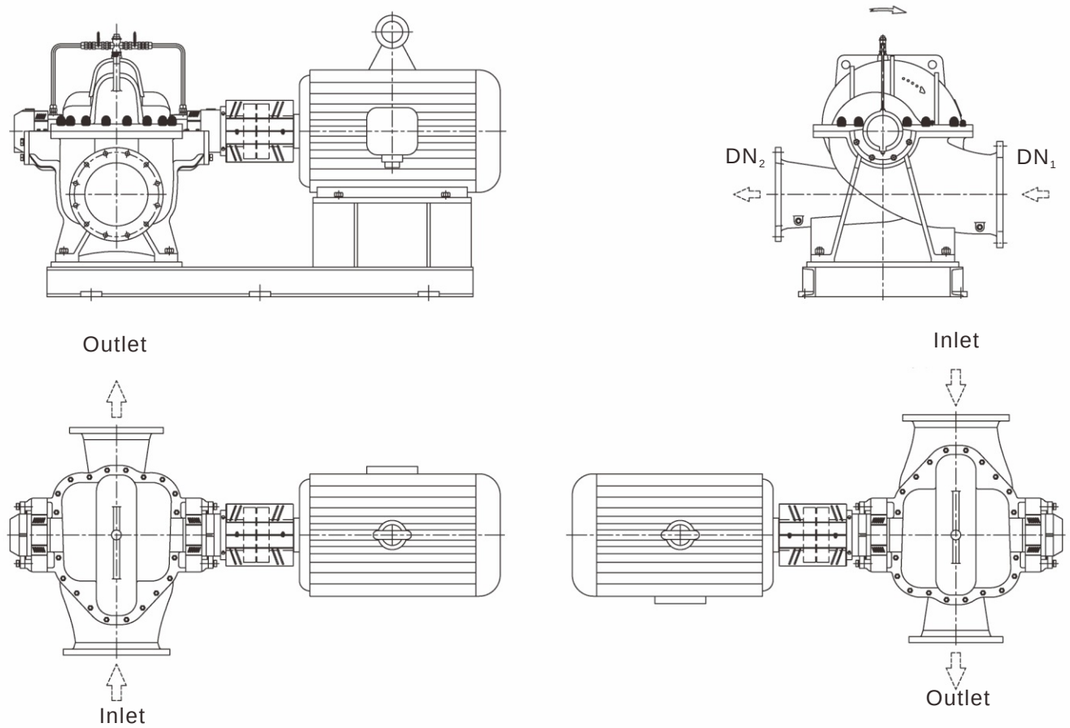

Comprehensive Performance Curve 1

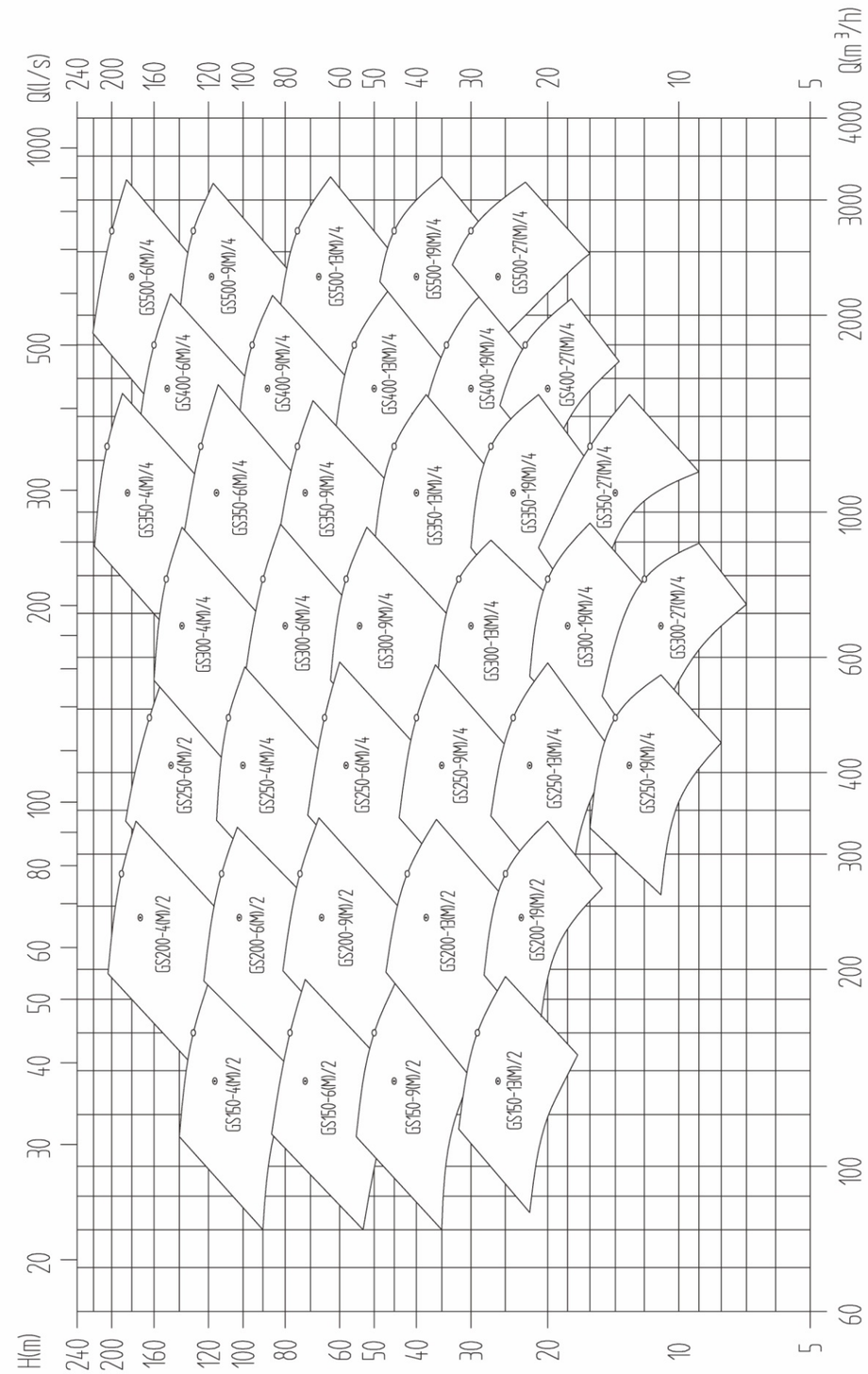

Comprehensive Performance Curve 2

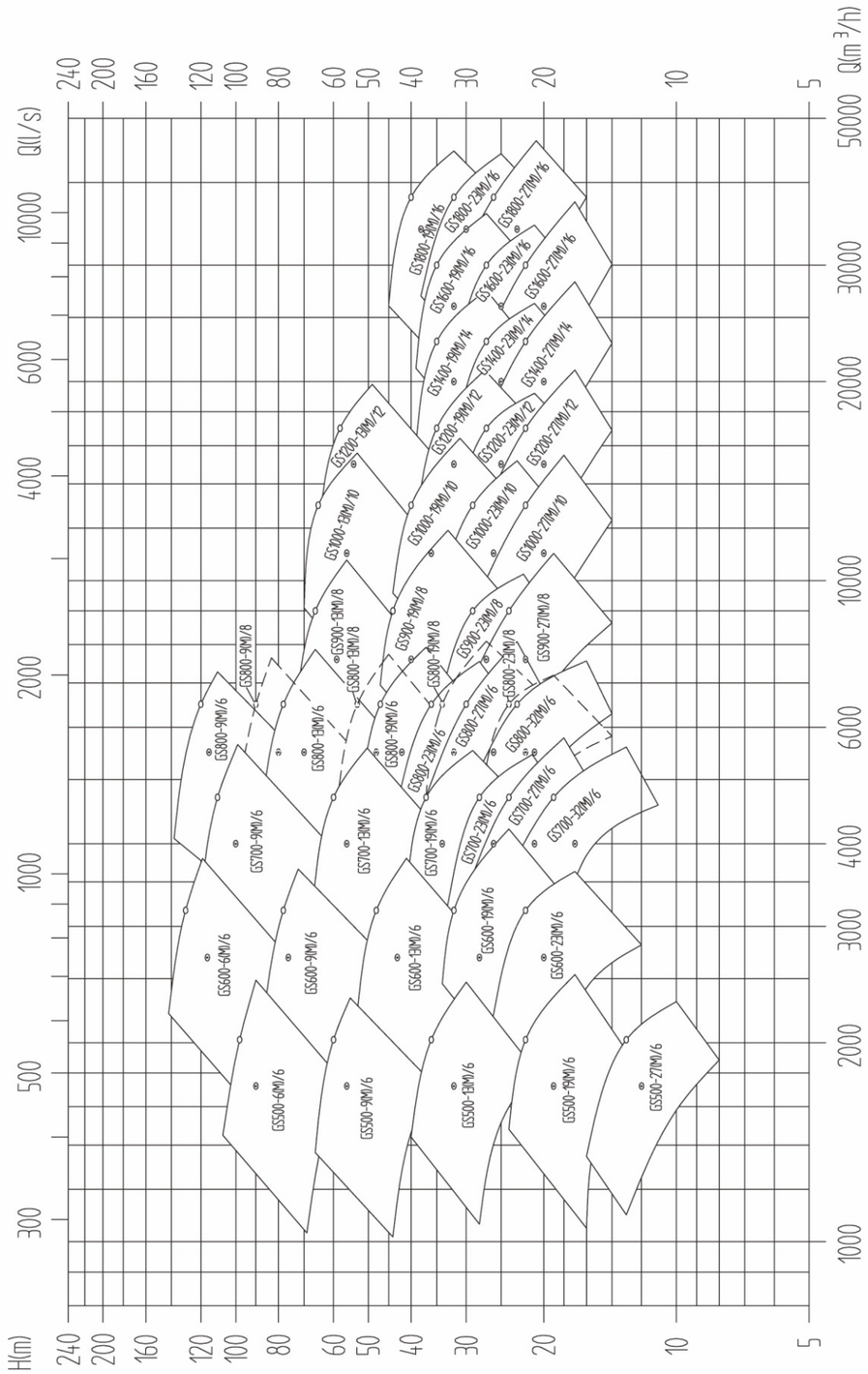

Performance Parameter List

Type		Capacity		Head	Speed	Shaft Power	Motor			Eff.	(NPSH)r	Pump Weight
							Power	Volt	Type			
		m^3/h	L/S	m	r/min	k W	k W	V		%	m	Kg
GS150-4/2		112	31.1	140	2970	60.2	110	380	Y315S-2	71	2.4	200
		160	44.4	130		73.6				77	3.4	
		192	53.3	124		85.4				76	5.1	
	A	105	29.2	124		50.0	90	380	Y280M-2	71	2.3	
		150	41.8	115		61.1				77	3.3	
		180	50.1	110		70.9				76	4.9	
	B	101	28.0	113		44.5	75	380	Y280S-2	70	2.2	
		144	40.0	105		54.4				76	3.2	
		173	48.0	100		63.1				75	4.8	
	C	93	25.8	96		34.9	55	380	Y250M-2	70	2.1	
		133	36.9	90		43.2				75	3.0	
		159	44.3	85		50.1				74	4.5	
GS150-4M/2		95	26.4	124	2970	45.2	75	380	Y280S-2	71	2.2	200
		135	37.5	116		55.4				77	3.1	
		160	44.4	110		63.1				76	4.6	
	A	89	24.8	110		37.6	75	380	Y280S-2	71	2.1	
		127	35.3	102		46.6				76	3.0	
		150	41.8	97		53.1				75	4.4	
	B	86	23.8	100		33.4	55	380	Y250M-2	70	2.1	
		122	33.8	94		41.5				75	2.9	
		144	40.0	89		47.2				74	4.3	
	C	80	22.2	87		27.2	45	380	Y225M-2	70	2.0	
		113	31.5	82		34.2				74	2.8	
		134	37.3	78		38.9				73	4.1	
GS150-6/2		112	31.1	86	2970	33.7	55	380	Y250M-2	78	2.1	170
		160	44.4	78		42.0				81	3.2	
		192	53.3	72		47.1				80	4.0	
	A	105	29.2	76		28.3	45	380	Y225M-2	77	2.0	
		150	41.8	69		35.3				80	3.1	
		180	50.1	64		39.6				79	3.8	
	B	99	27.4	67		23.5	37	380	Y200L2-2	76	1.9	
		141	39.1	60		29.3				79	2.9	
		169	46.9	56		32.9				78	3.7	
	C	91	25.2	56		18.6	30	380	Y200L1-2	75	1.8	
		130	36.0	51		23.2				78	2.8	
		156	43.2	47		26.0				77	3.5	
GS150-6M/2		95	26.4	79	2970	26.2	45	380	Y225M-2	78	1.8	170
		135	37.5	72		32.7				81	2.7	
		160	44.4	66		36.0				80	3.7	
	A	90	25.1	71		22.8	37	380	Y200L2-2	77	1.7	
		128	35.6	65		28.4				80	2.6	
		152	42.2	60		31.2				79	3.6	
	B	86	23.8	64		19.6	30	380	Y200L1-2	76	1.7	
		122	33.8	58		24.4				79	2.5	
		144	40.0	53		26.9				78	3.4	
	C	77	21.4	52		14.5	22	380	Y180M-2	75	1.6	
		109	30.4	47		18.0				78	2.3	
		130	36.0	43		19.9				77	3.2	

Type		Capacity		Head	Speed	Shaft Power	Motor			Eff.	(NPSH)r	Pump Weight
							Power	Volt	Type			
		m^3/h	L/S	m	r/min	k W	k W	V		%	m	Kg
GS150–9/2		112	31.1	53	2970	21.0	37	380	Y200L2–2	77	2.7	150
		160	44.4	50		26.3				83	3.6	
		192	53.3	45		28.7				82	4.2	
	A	106	29.6	48		18.2	30	380	Y200L1–2	76	2.6	
		152	42.2	45		22.8				82	3.5	
		182	50.7	41		24.9				81	4.1	
	B	97	27.1	40		14.2	22	380	Y180M–2	75	2.5	
		139	38.7	38		17.7				81	3.3	
		167	46.4	34		19.4				80	3.8	
	C	92	25.5	36		12.1	18.5	380	Y160L–2	74	2.4	
		131	36.4	34		15.0				80	3.2	
		157	43.7	30		16.4				79	3.7	
GS150–9M/2		95	26.4	48	2970	16.1	30	380	Y200L1–2	77	2.4	150
		135	37.5	45		19.9				83	3.2	
		160	44.4	41		21.8				82	3.7	
	A	90	25.1	43		14.0	22	380	Y180M–2	76	2.3	
		128	35.6	41		17.3				82	3.1	
		152	42.2	37		18.9				81	3.6	
	B	86	23.8	39		12.1	18.5	380	Y160L–2	75	2.2	
		122	33.8	36		14.9				81	3.0	
		144	40.0	33		16.3				80	3.4	
	C	80	22.2	34		10.0	15	380	Y160M2–2	74	2.1	
		113	31.5	32		12.3				80	2.8	
		134	37.3	29		13.4				79	3.3	
GS150–13/2		112	31.1	31	2970	12.0	18.5	380	Y160L–2	79	2.5	130
		160	44.4	28		14.4				85	4.3	
		192	53.3	24		15.1				83	5.2	
	A	106	29.6	28		10.4	15	380	Y160M2–2	78	2.4	
		152	42.2	25		12.5				84	4.2	
		182	50.7	22		13.1				82	5.0	
	B	102	28.3	26		9.3	15	380	Y160M2–2	77	2.3	
		146	40.4	23		11.1				83	4.0	
		175	48.5	20		11.7				81	4.9	
	C	96	26.8	23		7.9	15	380	Y160M2–2	76	2.3	
		138	38.2	21		9.5				82	3.9	
		165	45.9	18		10.0				80	4.7	
GS150–13M/2		95	26.4	29	2970	9.5	15	380	Y160M2–2	79	2.3	130
		135	37.5	26		11.3				85	4.0	
		160	44.4	22		11.6				83	4.7	
	A	90	25.1	26		8.3	15	380	Y160M2–2	78	2.2	
		128	35.6	23		9.8				84	3.9	
		152	42.2	20		10.0				82	4.5	
	B	87	24.3	25		7.6	11	380	Y160M1–2	77	2.2	
		124	34.5	22		9.0				83	3.8	
		147	40.9	19		9.2				81	4.4	
	C	84	23.2	22		6.7	11	380	Y160M1–2	76	2.1	
		119	33.0	20		7.9				82	3.7	
		141	39.1	17		8.2				80	4.3	

Type		Capacity		Head	Speed	Shaft Power	Motor			Eff.	(NPSH)r	Pump Weight
							Power	Volt	Type			
		m^3/h	L/S	m	r/min	k W	k W	V		%	m	Kg
GS200–4/2		196	54.4	202	2970	150	250	380 6000	Y355M2–2 Y3552–2	72	3.5	340
		280	77.8	190		186				78	4.9	
		336	93.3	182		216				77	7.5	
	A	186	51.7	182		128	200	380	Y315L2–2	72	3.4	
		266	73.9	171		159				78	4.7	
		319	88.7	164		186				77	7.2	
	B	172	47.9	156		104	160	380	Y315L1–2	71	3.2	
		246	68.4	147		128				77	4.5	
		296	82.1	141		149				76	6.9	
	C	161	44.6	136		85	132	380	Y315M–2	70	3.1	
		230	63.8	128		105				76	4.3	
		276	76.5	122		123				75	6.6	
GS200–4M/2		168	46.7	183	2970	116	200	380	Y315L2–2	72	3.2	340
		240	66.7	172		144				78	4.4	
		288	80.0	165		168				77	6.8	
	A	160	44.3	165		100	160	380	Y315L1–2	72	3.1	
		228	63.3	155		125				77	4.3	
		274	76.0	149		146				76	6.6	
	B	148	41.1	142		80	132	380	Y315M–2	71	2.9	
		211	58.7	133		101				76	4.0	
		253	70.4	128		118				75	6.2	
	C	138	38.3	123		66	110	380	Y315S–2	70	2.8	
		197	54.7	116		83				75	3.9	
		236	65.6	111		96				74	6.0	
GS200–6/2		196	54.4	123	2970	85.3	132	380	Y315M–2	77	3.0	300
		280	77.8	112		104.2				82	4.6	
		336	93.3	103		116.4				81	5.7	
	A	184	51.2	109		71.8	110	380	Y315S–2	76	2.9	
		263	73.1	99		87.6				81	4.4	
		316	87.7	91		97.9				80	5.5	
	B	172	47.9	95		59.7	90	380	Y280M–2	75	2.8	
		246	68.4	87		72.8				80	4.2	
		296	82.1	80		81.4				79	5.2	
	C	161	44.6	83		48.9	75	380	Y280S–2	74	2.6	
		230	63.8	75		59.6				79	4.0	
		276	76.5	69		66.7				78	5.0	
GS200–6M/2		168	46.7	112	2970	66.6	110	380	Y315S–2	77	2.8	300
		240	66.7	102		81.4				82	4.1	
		288	80.0	94		91.1				81	5.2	
	A	160	44.3	101		57.8	90	380	Y280M–2	76	2.7	
		228	63.3	92		70.6				81	4.0	
		274	76.0	85		79.1				80	5.0	
	B	150	41.5	89		48.2	75	380	Y280S–2	75	2.6	
		214	59.3	81		58.8				80	3.8	
		256	71.2	74		65.8				79	4.8	
	C	141	39.2	79		41.1	75	380	Y280S–2	74	2.5	
		202	56.0	72		50.0				79	3.7	
		242	67.2	66		56.1				78	4.6	

Type		Capacity		Head	Speed	Shaft Power	Motor			Eff.	(NPSH)r	Pump Weight
							Power	Volt	Type			
		m^3/h	L/S	m	r/min	k W	k W	V		%	m	Kg
GS200–9/2		196	54.4	78	2970	54.1	90	380	Y280M–2	77	3.7	260
		280	77.8	74		67.2				84	5.4	
		336	93.3	67		73.9				83	6.5	
	A	186	51.7	70		47.0	75	380	Y280S–2	76	3.6	
		266	73.9	67		58.3				83	5.2	
		319	88.7	60		64.1				82	6.3	
	B	176	49.0	63		40.5	75	380	Y280S–2	75	3.4	
		252	70.0	60		50.2				82	5.0	
		302	84.0	54		55.2				81	6.1	
	C	167	46.3	56		34.6	55	380	Y250M–2	74	3.3	
		238	66.1	53		42.8				81	4.8	
		286	79.3	48		47.1				80	5.8	
GS200–9M/2		168	46.7	70	2970	41.6	75	380	Y280S–2	77	3.3	260
		240	66.7	66		51.4				84	4.8	
		288	80.0	60		56.7				83	5.8	
	A	160	44.3	63		36.2	55	380	Y250M–2	76	3.2	
		228	63.3	60		44.6				83	4.6	
		274	76.0	54		49.2				82	5.6	
	B	150	41.5	55		30.1	45	380	Y225M–2	75	3.1	
		214	59.3	52		37.1				82	4.4	
		256	71.2	48		41.0				81	5.4	
	C	139	38.7	48		24.8	37	380	Y200L2–2	74	2.9	
		199	55.3	45		30.5				81	4.2	
		239	66.4	41		33.7				80	5.1	
GS200–13/2		196	54.4	47	2970	31.0	45	380	Y225M–2	81	3.8	200
		280	77.8	42		37.3				86	5.4	
		336	93.3	36		38.8				85	8.2	
	A	184	51.2	42		26.1	37	380	Y200L2–2	80	3.6	
		263	73.1	37		31.3				85	5.2	
		316	87.7	32		32.6				84	7.9	
	B	179	49.8	39		24.3	37	380	Y200L2–2	79	3.6	
		256	71.2	35		29.2				84	5.1	
		307	85.4	30		30.4				83	7.7	
	C	171	47.4	36		21.2	30	380	Y200L1–2	78	3.5	
		244	67.7	32		25.4				83	4.9	
		292	81.2	27		26.5				82	7.5	
GS200–13M/2		168	46.7	43	2970	24.3	37	380	Y200L2–2	81	3.5	200
		240	66.7	38		28.9				86	4.9	
		288	80.0	32		29.5				85	7.4	
	A	161	44.8	40		21.8	30	380	Y200L1–2	80	3.4	
		230	64.0	35		25.9				85	4.8	
		276	76.8	29		26.5				84	7.2	
	B	156	43.4	37		20.0	30	380	Y200L1–2	79	3.3	
		223	62.0	33		23.8				84	4.7	
		268	74.4	28		24.3				83	7.1	
	C	143	39.7	31		15.5	22	380	Y180M–2	78	3.1	
		204	56.7	27		18.4				83	4.4	
		245	68.0	23		18.8				82	6.6	

Type		Capacity		Head	Speed	Shaft Power	Motor			Eff.	(NPSH)r	Pump Weight
							Power	Volt	Type			
		m^3/h	L/S	m	r/min	k W	k W	V		%	m	Kg
GS200–19/2		196	54.4	28	2970	18.7	30	380	Y200L1–2	80	4.2	200
		280	77.8	25		22.2				86	4.7	
		336	93.3	20		22.6				81	5.8	
	A	186	51.7	25		16.2	30	380	Y200L1–2	79	4.1	
		266	73.9	23		19.2				85	4.5	
		319	88.7	18		19.6				80	5.6	
	B	180	50.1	24		14.9	22	380	Y180M–2	78	4.0	
		258	71.6	21		17.7				84	4.4	
		309	85.9	17		18.0				79	5.5	
	C	174	48.5	22		13.7	18.5	380	Y160L–2	77	3.9	
		249	69.2	20		16.2				83	4.3	
		299	83.1	16		16.6				78	5.4	
GS200–19M/2		168	46.7	26	2970	14.9	22	380	Y180M–2	80	3.9	200
		240	66.7	23		17.5				86	4.3	
		288	80.0	18		17.4				81	5.3	
	A	161	44.8	24		13.3	22	380	Y180M–2	79	3.8	
		230	64.0	21		15.7				85	4.2	
		276	76.8	17		15.6				80	5.2	
	B	156	43.4	22		12.3	18.5	380	Y160L–2	78	3.7	
		223	62.0	20		14.4				84	4.1	
		268	74.4	16		14.4				79	5.0	
	C	151	42.0	21		11.3	15	380	Y160L–2	77	3.6	
		216	60.0	19		13.2				83	4.0	
		259	72.0	15		13.2				78	4.9	
GS250–6/2		340	94.4	185	2970	217.0	355	6000 10000	Y3555–2 Y4501–2	79	4.4	480
		485	134.7	170		270.7				83	6.8	
		580	161.1	157		302.6				82	8.4	
	A	323	89.7	167		188.4	315	380 6000	Y355M3–2 Y3554–2	78	4.3	
		461	128.0	153		234.9				82	6.6	
		551	153.1	142		262.7				81	8.1	
	B	303	84.1	147		156.9	250	380 6000	Y355M1–2 Y3552–2	77	4.1	
		432	119.9	135		195.5				81	6.3	
		516	143.4	124		218.7				80	7.8	
	C	282	78.4	127		129.0	220	380 6000	Y315M3–2 Y3551–2	76	3.9	
		403	111.8	117		160.6				80	6.0	
		481	133.7	108		179.6				79	7.4	
GS250–6M/2		287	79.7	165	2970	163.3	250	380 6000	Y355M1–2 Y3552–2	79	3.9	480
		410	113.9	152		204.6				83	6.1	
		492	136.7	140		228.9				82	7.5	
	A	273	75.7	149		141.8	220	380 6000	Y315M3–2 Y3551–2	78	3.8	
		390	108.2	137		177.6				82	5.9	
		467	129.8	126		198.7				81	7.2	
	B	258	71.8	134		122.2	200	380	Y315L2–2	77	3.6	
		369	102.5	123		152.8				81	5.7	
		443	123.0	113		171.0				80	7.0	
	C	244	67.8	119		104.3	160	380	Y315L1–2	76	3.5	
		349	96.8	110		130.4				80	5.5	
		418	116.2	101		145.9				79	6.7	

Type		Capacity		Head	Speed	Shaft Power	Motor			Eff.	(NPSH)r	Pump Weight
							Power	Volt	Type			
		m^3/h	L/S	m	r/min	k W	k W	V		%	m	Kg
GS250-4/4		340	94.4	115	1480	144	220	380	Y355M1-4	74	1.4	560
		485	134.7	108		181		6000	Y3553-4	79	2.4	
		580	161.1	99		201				78	3.0	
	A	323	89.7	104		123	200	380	Y315L2-4	74	1.4	
		461	128.0	97		155				79	2.3	
		551	153.1	89		172				78	2.9	
	B	303	84.1	91		103	160	380	Y315L1-4	73	1.3	
		432	119.9	86		129				78	2.2	
		516	143.4	78		143				77	2.8	
	C	282	78.4	79		85	132	380	Y315M-4	72	1.2	
		403	111.8	74		106				77	2.1	
		481	133.7	68		118				76	2.6	
GS250-4M/4		287	79.7	106	1480	112.0	200	380	Y315L2-4	74	1.3	560
		410	113.9	100		141.4				79	2.2	
		492	136.7	92		158.1				78	2.8	
	A	273	75.7	96		96.0	160	380	Y315L1-4	74	1.3	
		390	108.2	90		121.3				79	2.1	
		467	129.8	83		135.6				78	2.7	
	B	258	71.8	86		82.8	132	380	Y315M-4	73	1.2	
		369	102.5	81		104.4				78	2.1	
		443	123.0	75		116.8				77	2.6	
	C	244	67.8	77		70.7	110	380	Y315S-4	72	1.2	
		349	96.8	72		89.1				77	2.0	
		418	116.2	66		99.7				76	2.5	
GS250-6/4		340	94.4	71	1480	82.2	132	380	Y315M-4	80	1.7	470
		485	134.7	65		102.3				84	2.6	
		580	161.1	60		115.6				82	3.2	
	A	321	89.3	63		70.3	110	380	Y315S-4	79	1.6	
		458	127.3	58		87.3				83	2.5	
		548	152.3	54		98.8				81	3.1	
	B	299	83.1	55		57.5	90	380	Y280M-4	78	1.6	
		427	118.6	50		71.4				82	2.4	
		510	141.8	46		80.8				80	2.9	
	C	281	77.9	48		48.0	75	380	Y280S-4	77	1.5	
		400	111.1	44		59.6				81	2.3	
		479	132.9	41		67.4				79	2.8	
GS250-6M/4		287	79.7	64	1480	62.6	110	380	Y315S-4	80	1.5	470
		410	113.9	58		78.1				83	2.3	
		492	136.7	53		86.7				82	3.0	
	A	273	75.7	58		54.3	90	380	Y280M-4	79	1.4	
		390	108.2	52		67.8				82	2.2	
		467	129.8	48		75.2				81	2.9	
	B	258	71.8	52		46.8	75	380	Y280S-4	78	1.4	
		369	102.5	47		58.3				81	2.1	
		443	123.0	43		64.8				80	2.8	
	C	235	65.4	43		35.8	55	380	Y250M-4	77	1.3	
		336	93.4	39		44.7				80	2.0	
		403	112.1	36		49.6				79	2.6	

Type		Capacity		Head	Speed	Shaft Power	Motor			Eff.	(NPSH)r	Pump Weight
							Power	Volt	Type			
		m^3/h	L/S	m	r/min	k W	k W	V		%	m	Kg
GS250-9/4		340	94.4	42	1480	48.6	75	380	Y280S-4	80	2.7	390
		485	134.7	40		61.5				86	3.1	
		580	161.1	36		66.9				85	3.6	
	A	323	89.7	38		42.2	75	380	Y280S-4	79	2.6	
		461	128.0	36		53.3				85	3.0	
		551	153.1	32		58.1				84	3.5	
	B	303	84.1	33		35.2	55	380	Y250M-4	78	2.5	
		432	119.9	32		44.4				84	2.9	
		516	143.4	29		48.3				83	3.3	
	C	282	78.4	29		28.9	45	380	Y225M-4	77	2.4	
		403	111.8	28		36.4				83	2.7	
		481	133.7	25		39.7				82	3.2	
GS250-9M/4		287	79.7	38	1480	37.1	55	380	Y250M-4	80	2.4	390
		410	113.9	35		45.5				86	2.7	
		492	136.7	31		48.9				85	3.2	
	A	273	75.7	34		32.3	55	380	Y250M-4	79	2.3	
		390	108.2	32		39.4				85	2.6	
		467	129.8	28		42.4				84	3.1	
	B	258	71.8	31		27.8	45	380	Y225M-4	78	2.2	
		369	102.5	28		33.9				84	2.5	
		443	123.0	25		36.5				83	3.0	
	C	244	67.8	27		23.7	37	380	Y225S-4	77	2.2	
		349	96.8	25		28.9				83	2.4	
		418	116.2	22		31.1				82	2.9	
GS250-13/4		340	94.4	27	1480	30.9	45	380	Y225M-4	81	2.8	340
		485	134.7	24		36.5				87	3.5	
		580	161.1	20		36.8				86	4.5	
	A	326	90.7	25		27.7	37	380	Y225S-4	80	2.7	
		466	129.3	22		32.6				86	3.4	
		557	154.7	18		32.9				85	4.4	
	B	313	86.9	23		24.7	37	380	Y225S-4	79	2.6	
		446	123.9	20		29.1				85	3.3	
		534	148.2	17		29.3				84	4.3	
	C	296	82.2	20		21.1	30	380	Y200L-4	78	2.6	
		422	117.2	18		24.9				84	3.2	
		505	140.2	15		25.1				83	4.1	
GS250-13M/4		287	79.7	24	1480	23.2	37	380	Y225S-4	81	2.6	340
		410	113.9	22		28.3				87	3.2	
		492	136.7	19		29.6				86	4.1	
	A	276	76.5	22		20.8	30	380	Y200L-4	80	2.5	
		394	109.3	20		25.3				86	3.1	
		472	131.2	18		26.5				85	4.0	
	B	263	72.9	20		18.2	30	380	Y200L-4	79	2.5	
		375	104.2	18		22.2				85	3.0	
		450	125.1	16		23.2				84	3.9	
	C	244	67.8	17		14.8	22	380	Y180L-4	78	2.3	
		349	96.8	16		18.0				84	2.9	
		418	116.2	14		18.8				83	3.7	

Type		Capacity		Head	Speed	Shaft Power	Motor			Eff.	(NPSH)r	Pump Weight
							Power	Volt	Type			
		m^3/h	L/S	m	r/min	k W	k W	V		%	m	Kg
GS250-19/4		340	94.4	16	1480	18.5	30	380	Y200L-4	80	4.0	350
		485	134.7	14		21.3				87	4.6	
		580	161.1	12		22.9				83	5.2	
	A	323	89.7	14		16.1	30	380	Y200L-4	79	3.9	
		461	128.0	13		18.4				86	4.4	
		551	153.1	11		19.8				82	5.0	
	B	313	86.9	14		14.8	22	380	Y180L-4	78	3.8	
		446	123.9	12		17.0				85	4.4	
		534	148.2	10		18.2				81	4.9	
	C	299	83.1	12		13.1	22	380	Y180L-4	77	3.7	
		427	118.6	11		15.0				84	4.2	
		510	141.8	9		16.2				80	4.8	
GS250-19M/4		287	79.7	14	1480	13.7	22	380	Y180L-4	80	3.4	350
		410	113.9	12		15.4				87	3.9	
		492	136.7	10		16.2				83	4.5	
	A	276	76.5	13		12.3	18.5	380	Y180M-4	79	3.3	
		394	109.3	11		13.8				86	3.8	
		472	131.2	9		14.5				82	4.4	
	B	264	73.3	12		10.9	18.5	380	Y180M-4	78	3.2	
		377	104.8	10		12.3				85	3.7	
		453	125.7	8		12.9				81	4.3	
	C	253	70.2	11		9.7	15	380	Y160L-4	77	3.1	
		361	100.2	9		10.9				84	3.6	
		433	120.3	7		10.3				80	4.1	
GS300-4/4		553	153.6	160	1480	321	500	6000 10000	Y4004-4 Y4504-4	75	2.4	970
		790	219.4	150		399				81	3.4	
		948	263.3	138		451				79	4.3	
	A	525	145.9	144		276	450	6000 10000	Y4003-4 Y4503-4	75	2.3	
		751	208.5	135		346				80	3.3	
		901	250.2	125		387				79	4.2	
	B	498	138.3	130		238	400	6000 10000	Y4002-4 Y4502-4	74	2.2	
		711	197.5	122		298				79	3.2	
		853	237.0	112		333				78	4.0	
	C	470	130.6	116		203	315	380 6000	Y355L2-4 Y3556-4	73	2.2	
		672	186.5	108		254				78	3.1	
		806	223.8	100		284				77	3.9	
GS300-4M/4		469	130.3	147	1480	250	400	6000 10000	Y4002-4 Y4502-4	75	2.2	970
		670	186.1	138		311				81	3.1	
		804	223.3	127		352				79	4.0	
	A	446	123.8	133		215	355	6000 10000	Y4001-4 Y4501-4	75	2.1	
		637	176.8	125		270				80	3.0	
		764	212.2	115		302				79	3.9	
	B	417	115.9	116		179	280	380 6000	Y355L1-4 Y3555-4	74	2.0	
		596	165.6	109		225				79	2.9	
		716	198.8	101		251				78	3.7	
	C	392	108.8	102		150	250	380 6000	Y355M2-4 Y3554-4	73	2.0	
		559	155.4	96		188				78	2.7	
		671	186.5	89		210				77	3.5	

Type		Capacity		Head	Speed	Shaft Power	Motor			Eff.	(NPSH)r	Pump Weight
							Power	Volt	Type			
		m^3/h	L/S	m	r/min	k W	k W	V		%	m	Kg
GS300-6/4		553	153.6	99	1480	184	315	380 6000	Y355L2-4 Y3556-4	81	2.4	690
		790	219.4	90		228				85	3.4	
		948	263.3	82		255				83	4.5	
	A	525	145.9	89		160	250	380 6000	Y355M2-4 Y3554-4	80	2.3	
		751	208.5	81		198				84	3.3	
		901	250.2	74		221				82	4.3	
	B	503	139.8	82		142	220	380 6000	Y355M1-4 Y3553-4	79	2.3	
		719	199.7	75		176				83	3.2	
		863	239.6	68		197				81	4.2	
	C	470	130.6	72		117	200	380	Y315L2-4	78	2.2	
		672	186.5	65		145				82	3.1	
		806	223.8	59		163				80	4.0	
GS300-6M/4		469	130.3	88	1480	138.8	220	380 6000	Y355M1-4 Y3553-4	81	2.2	690
		670	186.1	80		173.9				84	3.0	
		804	223.3	73		192.7				83	4.0	
	A	446	123.8	79		120.5	200	380	Y315L2-4	80	2.1	
		637	176.8	72		150.9				83	2.9	
		764	212.2	66		167.2				82	3.9	
	B	422	117.3	71		103.8	160	380	Y315L1-4	79	2.1	
		603	167.5	65		129.9				82	2.8	
		724	201.0	59		143.9				81	3.7	
	C	394	109.4	62		85.5	132	380	Y315M-4	78	2.0	
		563	156.3	56		106.9				81	2.7	
		675	187.6	52		118.5				80	3.6	
GS300-9/4		553	153.6	62	1480	113.9	200	380	Y315L2-4	82	4.0	550
		790	219.4	58		143.5				87	4.6	
		948	263.3	55		167.2				85	5.5	
	A	525	145.9	56		98.9	160	380	Y315L1-4	81	3.9	
		751	208.5	52		124.5				86	4.4	
		901	250.2	50		145.0				84	5.3	
	B	498	138.3	50		85.1	132	380	Y315M-4	80	3.7	
		711	197.5	47		107.1				85	4.3	
		853	237.0	45		124.8				83	5.1	
	C	465	129.0	44		70.1	110	380	Y315S-4	79	3.6	
		664	184.3	41		88.1				84	4.1	
		796	221.2	39		102.7				82	4.9	
GS300-9M/4		469	130.3	58	1480	90.4	160	380	Y315L1-4	82	3.7	550
		670	186.1	54		113.3				87	4.3	
		804	223.3	49		126.3				85	5.1	
	A	446	123.8	52		78.5	132	380	Y315M-4	81	3.6	
		637	176.8	49		98.3				86	4.2	
		764	212.2	44		109.6				84	4.9	
	B	417	115.9	46		65.3	110	380	Y315S-4	80	3.4	
		596	165.6	43		81.8				85	4.0	
		716	198.8	39		91.2				83	4.7	
	C	394	109.4	41		55.6	90	380	Y280M-4	79	3.3	
		563	156.3	38		69.6				84	3.8	
		675	187.6	35		77.6				82	4.5	

Type		Capacity		Head	Speed	Shaft Power	Motor			Eff.	(NPSH)r	Pump Weight
							Power	Volt	Type			
		m^3/h	L/S	m	r/min	k W	k W	V		%	m	Kg
GS300–13/4		553	153.6	36	1480	66.2	90	380	Y280M–4	82	3.6	430
		790	219.4	32		78.3				88	4.3	
		948	263.3	27		80.2				87	5.4	
	A	520	144.4	32		55.6	75	380	Y280S–4	81	3.5	
		743	206.3	28		65.8				87	4.1	
		891	247.5	24		67.4				86	5.2	
	B	503	139.8	30		51.1	75	380	Y280S–4	80	3.4	
		719	199.7	26		60.4				86	4.0	
		863	239.6	22		61.8				85	5.1	
	C	462	128.3	25		40.0	55	380	Y250M–4	79	3.2	
		660	183.2	22		47.2				85	3.8	
		792	219.9	19		48.3				84	4.8	
GS300–13M/4		469	130.3	33	1480	51.4	75	380	Y280S–4	82	2.5	430
		670	186.1	30		62.2				88	3.4	
		804	223.3	26		66.2				86	4.6	
	A	450	125.1	30		46.1	75	380	Y280S–4	81	2.4	
		643	178.7	28		55.7				87	3.3	
		772	214.4	24		59.3				85	4.5	
	B	427	118.6	27		39.7	55	380	Y250M–4	80	2.3	
		610	169.4	25		48.0				86	3.2	
		732	203.2	22		51.1				84	4.3	
	C	403	112.0	24		34.0	55	380	Y250M–4	79	2.3	
		576	160.1	22		41.0				85	3.1	
		691	192.1	19		43.7				83	4.2	
GS300–19/4		553	153.6	22	1480	40.4	55	380	Y250M–4	82	4.5	420
		790	219.4	19		46.5				88	5.6	
		948	263.3	16		48.6				85	6.5	
	A	531	147.5	20		36.2	55	380	Y250M–4	81	4.4	
		758	210.7	18		41.6				87	5.4	
		910	252.8	15		43.5				84	6.3	
	B	509	141.3	19		32.3	45	380	Y225M–4	80	4.3	
		727	201.9	16		37.0				86	5.3	
		872	242.3	14		38.8				83	6.1	
	C	476	132.1	16		26.7	37	380	Y225S–4	79	4.1	
		679	188.7	14		30.6				85	5.1	
		815	226.5	12		32.1				82	5.9	
GS300–19M/4		469	130.3	20	1480	31.2	45	380	Y225M–4	82	4.3	420
		670	186.1	18		37.3				88	5.3	
		804	223.3	14		36.1				85	6.2	
	A	450	125.1	18		27.9	37	380	Y225S–4	81	4.2	
		643	178.7	17		33.4				87	5.2	
		772	214.4	13		32.3				84	6.0	
	B	431	119.9	17		24.9	37	380	Y225S–4	80	4.1	
		616	171.2	15		29.8				86	5.0	
		740	205.5	12		28.8				83	5.9	
	C	413	114.6	15		22.0	30	380	Y200L–4	79	3.9	
		590	163.8	14		26.3				85	4.9	
		708	196.5	11		25.5				82	5.7	

Type		Capacity		Head	Speed	Shaft Power	Motor			Eff.	(NPSH)r	Pump Weight
							Power	Volt	Type			
		m^3/h	L/S	m	r/min	k W	k W	V		%	m	Kg
GS300–27/4		553	153.6	15	1480	28.3	37	380	Y225S–4	80	4.8	450
		790	219.4	12		29.7				87	5.5	
		948	263.3	10		30.8				84	6.5	
	A	531	147.5	14		25.3	30	380	Y200L–4	79	4.7	
		758	210.7	11		26.6				86	5.4	
		910	252.8	9		27.5				83	6.3	
	B	509	141.3	13		22.6	30	380	Y200L–4	78	4.5	
		727	201.9	10		23.7				85	5.2	
		872	242.3	8		24.5				82	6.1	
GS300–27M/4		469	130.3	14	1480	22.4	30	380	Y200L–4	80	4.4	450
		670	186.1	11		23.1				87	5.0	
		804	223.3	9		23.5				84	6.0	
	A	450	125.1	13		20.0	30	380	Y200L–4	79	4.3	
		643	178.7	10		20.7				86	4.9	
		772	214.4	8		21.0				83	5.8	
	B	431	119.9	12		17.9	22	380	Y180L–4	78	4.2	
		616	171.2	9		18.4				85	4.7	
		740	205.5	8		18.7				82	5.7	
GS350–4/4		882	245.0	219	1480	666	1120	6000 10000	Y5002–4 Y5005–4	79 83	3.4 4.7	1350
		1260	350.0	205		848						
		1512	420.0	189		961				81	6.0	
	A	833	231.5	196		584	900	6000 10000	Y4504–4 Y5003–4	76 81	3.3 4.5	
		1191	330.8	183		733						
		1429	396.9	169		821				80	5.8	
	B	794	220.5	177		512	800	6000 10000	Y4503–4 Y5002–4	75 80	3.2 4.4	
		1134	315.0	166		641						
		1361	378.0	153		719				79	5.6	
	C	750	208.3	158		437	710	6000 10000	Y4502–4 Y5001–4	74 79	3.1 4.2	
		1071	297.5	148		547						
		1285	357.0	137		613				78	5.4	
GS350–4M/4		750	208.3	196	1480	507	800	6000 10000	Y4503–4 Y5002–4	79 83	3.1 4.2	1350
		1070	297.2	184		646						
		1290	358.3	169		733				81	5.4	
	A	713	197.9	177		452	710	6000 10000	Y4502–4 Y5001–4	76 80	3.0 4.1	
		1017	282.4	166		575						
		1226	340.4	153		645				79	5.2	
	B	675	187.5	159		389	630	6000 10000	Y4501–4 Y4506–4	75 79	2.9 3.9	
		963	267.5	149		495						
		1161	322.5	137		555				78	5.0	
	C	638	177.1	142		332	560	6000 10000	Y4005–4 Y4505–4	74 78	2.8 3.8	
		910	252.6	133		422						
		1097	304.6	122		474				77	4.8	
GS350–6/4		882	245.0	137	1480	402	630	6000 10000	Y4501–4 Y4506–4	82 86	3.1 4.2	1090
		1260	350.0	125		499						
		1512	420.0	115		571				83	5.0	
	A	838	232.8	124		349	560	6000 10000	Y4005–4 Y4505–4	81 85	3.0 4.1	
		1197	332.5	113		433						
		1436	399.0	104		495				82	4.8	

Type		Capacity		Head	Speed	Shaft Power	Motor			Eff.	(NPSH)r	Pump Weight
							Power	Volt	Type			
		m^3/h	L/S	m	r/min	k W	k W	V		%	m	Kg
GS350-6/4	B	794	220.5	111	1480	300	500	6000	Y4004-4	80	2.9	1090
		1134	315.0	101		372		10000	Y4504-4	84	3.9	
		1361	378.0	93		426				81	4.7	
	C	750	208.3	99		256	400	6000	Y4002-4	79	2.8	
		1071	297.5	90		318		10000	Y4502-4	83	3.8	
		1285	357.0	83		364				80	4.5	
GS350-6M/4		750	208.3	126	1480	314	500	6000	Y4004-4	82	2.9	1090
		1070	297.2	115		390		10000	Y4504-4	86	3.9	
		1290	358.3	106		449				83	4.6	
	A	713	197.9	114		273	450	6000	Y4003-4	81	2.8	
		1017	282.4	104		338		10000	Y4503-4	85	3.8	
		1226	340.4	96		390				82	4.4	
	B	664	184.4	99		223	355	6000	Y4001-4	80	2.7	
		947	263.0	90		277		10000	Y4501-4	84	3.6	
		1142	317.1	83		319				81	4.2	
	C	630	175.0	89		193	315	380	Y355L2-4	79	2.6	
		899	249.7	81		239		6000	Y3556-4	83	3.5	
		1084	301.0	75		276				80	4.1	
GS350-9/4		882	245.0	80	1480	234	355	6000	Y4001-4	82	3.8	870
		1260	350.0	75		293		10000	Y4501-4	88	5.2	
		1512	420.0	68		330				85	6.7	
	A	829	230.3	71		197	315	380	Y355L2-4	81	3.6	
		1184	329.0	66		246		6000	Y3556-4	87	5.0	
		1421	394.8	60		277				84	6.4	
	B	794	220.5	65		175	280	380	Y355L1-4	80	3.5	
		1134	315.0	61		218		6000	Y3555-4	86	4.8	
		1361	378.0	55		246				83	6.2	
	C	750	208.3	58		149	250	380	Y355M2-4	79	3.4	
		1071	297.5	54		186		6000	Y3554-4	85	4.7	
		1285	357.0	49		210				82	6.0	
GS350-9M/4		750	208.3	78	1480	194	315	380	Y355L2-4	82	3.5	870
		1070	297.2	72		239		6000	Y3556-4	88	4.8	
		1290	358.3	65		269				85	6.2	
	A	705	195.8	69		163	250	380	Y355M2-4	81	3.4	
		1006	279.4	64		200		6000	Y3554-4	87	4.6	
		1213	336.8	57		226				84	5.9	
	B	675	187.5	63		145	220	380	Y355M1-4	80	3.3	
		963	267.5	58		178		6000	Y3553-4	86	4.5	
		1161	322.5	53		201				83	5.8	
	C	638	177.1	56		124	200	380	Y315L2-4	79	3.1	
		910	252.6	52		152				85	4.3	
		1097	304.6	47		171				82	5.6	
GS350-13/4		882	245.0	49	1480	142	200	380	Y315L2-4	83	4.2	690
		1260	350.0	44		170				89	5.5	
		1512	420.0	38		180				87	7.6	
	A	847	235.2	45		127	200	380	Y315L2-4	82	4.1	
		1210	336.0	41		152				88	5.4	
		1452	403.2	35		161				86	7.4	

Type		Capacity		Head	Speed	Shaft Power	Motor			Eff.	(NPSH)r	Pump Weight
							Power	Volt	Type			
		m^3/h	L/S	m	r/min	k W	k W	V		%	m	Kg
GS350-13/4	B	811	225.4	41	1480	113	160	380	Y315L1-4	81	4.0	690
		1159	322.0	37		135				87	5.2	
		1391	386.4	32		143				85	7.2	
	C	759	210.7	36		94	132	380	Y315M-4	80	3.8	
		1084	301.0	33		112				86	5.0	
		1300	361.2	28		119				84	6.9	
GS350-13M/4		750	208.3	44	1480	108.3	160	380	Y315L1-4	83	3.0	690
		1070	297.2	40		131.0				89	4.7	
		1290	358.3	34		137.4				87	6.7	
	A	713	197.9	40		94.0	132	380	Y315M-4	82	2.9	
		1017	282.4	36		113.6				88	4.5	
		1226	340.4	31		119.2				86	6.5	
	B	690	191.7	37		86.4	132	380	Y315M-4	81	2.8	
		984	273.4	34		104.4				87	4.4	
		1187	329.7	29		109.5				85	6.3	
	C	660	183.3	34		76.6	110	380	Y315S-4	80	2.8	
		942	261.6	31		92.4				86	4.3	
		1135	315.3	26		97.0				84	6.2	
GS350-19/4		882	245.0	30	1480	86.9	132	380	Y315M-4	83	4.2	580
		1260	350.0	27		104.2				89	5.8	
		1512	420.0	21		100.6				86	7.6	
	A	847	235.2	28		77.8	110	380	Y315S-4	82	4.1	
		1210	336.0	25		93.2				88	5.6	
		1452	403.2	19		90.1				85	7.4	
	B	803	223.0	25		67.1	90	380	Y280M-4	81	3.9	
		1147	318.5	22		80.3				87	5.4	
		1376	382.2	17		77.6				84	7.1	
	C	767	213.2	23		59.4	90	380	Y280M-4	80	3.8	
		1096	304.5	20		71.0				86	5.3	
		1315	365.4	16		68.6				83	6.9	
GS350-19M/4		750	208.3	27	1480	66.5	90	380	Y280M-4	83	3.8	580
		1070	297.2	24		78.6				89	5.0	
		1290	358.3	19		77.7				86	5.9	
	A	720	200.0	25		59.5	90	380	Y280M-4	82	3.7	
		1027	285.3	22		70.4				88	4.9	
		1238	344.0	18		69.5				85	5.7	
	B	690	191.7	23		53.0	75	380	Y280S-4	81	3.6	
		984	273.4	20		62.6				87	4.7	
		1187	329.7	16		61.9				84	5.6	
	C	653	181.3	20		45.4	75	380	Y280S-4	80	3.5	
		931	258.6	18		53.6				86	4.6	
		1122	311.8	14		53.0				83	5.4	
GS350-27/4		882	245.0	20	1480	58.6	75	380	Y280S-4	82	4.7	640
		1260	350.0	16		61.7				89	5.8	
		1512	420.0	13		63.0				85	6.9	
	A	847	235.2	18		52.5	75	380	Y280S-4	81	4.6	
		1210	336.0	15		55.2				88	5.6	
		1452	403.2	12		56.4				84	6.7	

Type		Capacity		Head	Speed	Shaft Power	Motor			Eff.	(NPSH)r	Pump Weight
							Power	Volt	Type			
		m^3/h	L/S	m	r/min	k W	k W	V		%	m	Kg
GS350–27/4	B	803	223.0	17	1480	45.3	55	380	Y250M–4	80	4.4	640
		1147	318.5	13		47.6				87	5.4	
		1376	382.2	10		45.2				83	6.5	
GS350–27M/4		750	208.3	18	1480	44.9	55	380	Y250M–4	82	4.2	640
		1070	297.2	14		46.4				88	5.2	
		1290	358.3	11		45.5				85	6.1	
	A	720	200.0	17		40.2	55	380	Y250M–4	81	4.1	
		1027	285.3	13		41.5				87	5.1	
		1238	344.0	10		40.7				84	5.9	
	B	690	191.7	15		35.8	45	380	Y225M–4	80	4.0	
		984	273.4	12		37.0				86	4.9	
		1187	329.7	9		36.3				83	5.8	
GS400–6/4		1260	350.0	178	1480	736	1120	6000 10000	Y5002–4 Y5005–4	83	3.8	1690
		1800	500.0	160		902				87	5.2	
		2160	600.0	147		1018				85	6.5	
	A	1197	332.5	161		639	1000	6000 10000	Y5001–4 Y5004–4	82	3.7	
		1710	475.0	144		782				86	5.0	
		2052	570.0	133		883				84	6.3	
	B	1134	315.0	144		550	900	6000 10000	Y4504–4 Y5003–4	81	3.5	
		1620	450.0	130		673				85	4.8	
		1944	540.0	119		760				83	6.1	
	C	1071	297.5	129		469	710	6000 10000	Y4502–4 Y5001–4	80	3.4	
		1530	425.0	116		574				84	4.7	
		1836	510.0	106		648				82	5.8	
GS400–6M/4		1071	297.5	161	1480	566	900	6000 10000	Y4504–4 Y5003–4	83	3.5	1690
		1530	425.0	145		695				87	4.7	
		1800	500.0	132		762				85	5.9	
	A	1012	281.1	144		484	710	6000 10000	Y4502–4 Y5001–4	82	3.4	
		1446	401.6	129		593				86	4.5	
		1701	472.5	118		650				84	5.7	
	B	964	267.8	130		423	630	6000 10000	Y4501–4 Y4506–4	81	3.3	
		1377	382.5	117		518				85	4.4	
		1620	450.0	107		569				83	5.5	
	C	910	252.9	116		361	560	6000 10000	Y4005–4 Y4505–4	80	3.1	
		1301	361.3	105		442				84	4.2	
		1530	425.0	95		485				82	5.3	
GS400–9/4		1260	350.0	108	1480	447	630	6000 10000	Y4501–4 Y4506–4	83	3.5	1220
		1800	500.0	95		530				88	5.0	
		2160	600.0	84		575				86	6.4	
	A	1197	332.5	97		388	560	6000 10000	Y4005–4 Y4505–4	82	3.4	
		1710	475.0	86		459				87	4.8	
		2052	570.0	76		499				85	6.2	
	B	1121	311.5	86		323	450	6000 10000	Y4003–4 Y4503–4	81	3.2	
		1602	445.0	75		382				86	4.6	
		1922	534.0	67		415				84	5.9	
	C	1071	297.5	78		285	400	6000 10000	Y4002–4 Y4502–4	80	3.1	
		1530	425.0	69		337				85	4.5	
		1836	510.0	61		366				83	5.7	

Type		Capacity		Head	Speed	Shaft Power	Motor			Eff.	(NPSH)r	Pump Weight
							Power	Volt	Type			
		m^3/h	L/S	m	r/min	k W	k W	V		%	m	Kg
GS400–9M/4		1071	297.5	100	1480	352	500	6000 10000	Y4004–4 Y4504–4	83	3.2	1220
		1530	425.0	88		417				88	4.6	
		1836	510.0	78		454				86	5.9	
	A	1028	285.6	92		315	450	6000 10000	Y4003–4 Y4503–4	82	3.1	
		1469	408.0	81		373				87	4.5	
		1763	489.6	72		406				85	5.7	
	B	953	264.8	79		254	355	6000 10000	Y4001–4 Y4501–4	81	3.0	
		1362	378.3	70		301				86	4.3	
		1634	453.9	62		328				84	5.5	
	C	910	252.9	72		224	315	380 6000	Y355L2–4 Y3556–4	80	2.9	
		1301	361.3	64		265				85	4.1	
		1561	433.5	56		289				83	5.3	
GS400–13/4		1260	350.0	67	1480	277	400	6000 10000	Y4002–4 Y4502–4	83	4.0	1040
		1800	500.0	59		325				89	4.8	
		2160	600.0	52		352				87	5.9	
	A	1210	336.0	62		248	355	6000 10000	Y4001–4 Y4501–4	82	3.9	
		1728	480.0	54		291				88	4.7	
		2074	576.0	48		315				86	5.7	
	B	1159	322.0	57		221	315	380 6000	Y355L2–4 Y3556–4	81	3.8	
		1656	460.0	50		259				87	4.5	
		1987	552.0	44		280				85	5.6	
	C	1096	304.5	51		189	280	380 6000	Y355L1–4 Y3555–4	80	3.6	
		1566	435.0	45		222				86	4.4	
		1879	522.0	39		240				84	5.4	
GS400–13M/4		1071	297.5	59	1480	207	315	380 6000	Y355L2–4 Y3556–4	83	3.6	1040
		1530	425.0	52		244				89	4.3	
		1836	510.0	46		265				87	5.2	
	A	1028	285.6	54		186	280	380 6000	Y355L1–4 Y3555–4	82	3.5	
		1469	408.0	48		218				88	4.2	
		1763	489.6	42		237				86	5.1	
	B	985	273.7	50		166	250	380 6000	Y355M2–4 Y3554–4	81	3.4	
		1408	391.0	44		194				87	4.1	
		1689	469.2	39		211				85	4.9	
	C	942	261.8	46		147	220	380 6000	Y355M1–4 Y3553–4	80	3.3	
		1346	374.0	40		172				86	3.9	
		1616	448.8	36		187				84	4.8	
GS400–19/4		1260	350.0	44	1480	180	250	380 6000	Y355M2–4 Y3554–4	84	5.5	980
		1800	500.0	38		209				89	6.4	
		2160	600.0	30		208				85	7.3	
	A	1210	336.0	41		161	220	380 6000	Y355M1–4 Y3553–4	83	5.4	
		1728	480.0	35		187				88	6.2	
		2074	576.0	28		186				84	7.1	
	B	1159	322.0	37		143	200	380	Y315L2–4	82	5.2	
		1656	460.0	32		167				87	6.1	
		1987	552.0	25		166				83	6.9	
	C	1109	308.0	34		127	200	380	Y315L2–4	81	5.1	
		1584	440.0	29		148				86	5.9	
		1901	528.0	23		147				82	6.7	

Type		Capacity		Head	Speed	Shaft Power	Motor			Eff.	(NPSH)r	Pump Weight
							Power	Volt	Type			
		m^3/h	L/S	m	r/min	k W	k W	V		%	m	Kg
GS400-19M/4		1071	297.5	39	1480	136	200	380	Y315L2-4	84	4.9	980
		1530	425.0	32		150				89	5.7	
		1836	510.0	26		153				85	6.5	
	A	1028	285.6	36		121	160	380	Y315L1-4	83	4.8	
		1469	408.0	29		134				88	5.5	
		1763	489.6	24		137				84	6.3	
	B	985	273.7	33		108	160	380	Y315L1-4	82	4.6	
		1408	391.0	27		119				87	5.4	
		1689	469.2	22		122				83	6.1	
	C	932	258.8	30		93	132	380	Y315M-4	81	4.5	
		1331	369.8	24		102				86	5.2	
		1597	443.7	20		104				82	5.9	
GS400-27/4		1260	350.0	27	1480	112	160	380	Y315L1-4	83	5.3	860
		1800	500.0	22		123				88	6.0	
		2160	600.0	18		125				85	7.4	
	A	1210	336.0	25		100	160	380	Y315L1-4	82	5.2	
		1728	480.0	20		110				87	5.8	
		2074	576.0	17		112				84	7.2	
	B	1159	322.0	23		89	132	380	Y315M-4	81	5.0	
		1656	460.0	19		98				86	5.7	
		1987	552.0	15		99				83	7.0	
GS400-27M/4		1071	297.5	25	1480	87.9	132	380	Y315M-4	83	4.8	860
		1530	425.0	20		94.8				88	5.4	
		1836	510.0	16		94.2				85	6.7	
	A	1007	279.7	22		73.9	110	380	Y315S-4	82	4.6	
		1438	399.5	18		79.6				87	5.2	
		1726	479.4	14		79.2				84	6.4	
	B	953	264.8	20		63.5	90	380	Y280M-4	81	4.4	
		1362	378.3	16		68.4				86	5.0	
		1634	453.9	13		68.0				83	6.2	
GS500-6/4		1885	524	221	1480	1368	2240	6000	Y6301-4	83	4.5	2870
		2690	747	200		1685		10000	Y6303-4	87	5.6	
		3220	894	182		1879				85	7.8	
	A	1772	492	195		1150	1800	6000	Y5602-4	82	4.3	
		2529	702	177		1416		10000	Y6301-4	86	5.4	
		3027	841	161		1579				84	7.5	
	B	1697	471	179		1022	1600	6000	Y5601-4	81	4.2	
		2421	673	162		1257		10000	Y5603-4	85	5.2	
		2898	805	147		1403				83	7.3	
	C	1621	450	163		903	1400	6000	Y5004-4	80	4.1	
		2313	643	148		1110		10000	Y5602-4	84	5.1	
		2769	769	135		1239				82	7.1	
GS500-6/4		1605	446	198	1480	1043	1600	6000	Y5601-4	83	4.0	2870
		2290	636	180		1291		10000	Y5603-4	87	5.2	
		2745	763	165		1452				85	7.0	
	A	1525	424	179		905	1400	6000	Y5004-4	82	3.9	
		2176	604	162		1120		10000	Y5602-4	86	5.0	
		2608	724	149		1260				84	6.8	

Type		Capacity		Head	Speed	Shaft Power	Motor			Eff.	(NPSH)r	Pump Weight
							Power	Volt	Type			
		m^3/h	L/S	m	r/min	k W	k W	V		%	m	Kg
GS500-6M/4	B	1461	406	164	1480	806	1250	6000	Y5003-4	81	3.8	2870
		2084	579	149		996		10000	Y5601-4	85	4.9	
		2498	694	137		1121				83	6.6	
	C	1396	388	150		713	1120	6000	Y5002-4	80	3.6	
		1992	553	136		881		10000	Y5005-4	84	4.7	
		2388	663	125		991				82	6.4	
GS500-9/4		1885	524	148	1480	905	1250	6000	Y5003-4	84	4.7	2150
		2690	747	130		1071		10000	Y5601-4	89	6.8	
		3220	894	114		1163				86	8.9	
	A	1791	497	134		785	1120	6000	Y5002-4	83	4.5	
		2556	710	117		928		10000	Y5005-4	88	6.6	
		3059	850	103		1009				85	8.6	
	B	1715	476	123		699	1000	6000	Y5001-4	82	4.4	
		2448	680	108		825		10000	Y5004-4	87	6.4	
		2930	814	94		897				84	8.4	
	C	1659	461	115		640	900	6000	Y4504-4	81	4.3	
		2367	658	101		755		10000	Y5003-4	86	6.2	
		2834	787	88		821				83	8.2	
GS500-9M/4		1605	446	134	1480	698	1000	6000	Y5001-4	84	4.3	2150
		2290	636	118		827		10000	Y5004-4	89	6.2	
		2745	763	104		905				86	8.1	
	A	1541	428	123		625	900	6000	Y4504-4	83	4.2	
		2198	611	109		740		10000	Y5003-4	88	6.0	
		2635	732	96		810				85	7.9	
	B	1477	410	113		557	800	6000	Y4503-4	82	4.1	
		2107	585	100		659		10000	Y5002-4	87	5.9	
		2525	702	88		721				84	7.7	
	C	1412	392	104		493	710	6000	Y4502-4	81	3.9	
		2015	560	91		583		10000	Y5001-4	86	5.7	
		2416	671	81		639				83	7.4	
GS500-13/4		1885	524	85	1480	514	710	6000	Y4502-4	85	4.8	1430
		2690	747	75		611		10000	Y5001-4	90	7.2	
		3220	894	63		635				87	8.7	
	A	1800	500	78		453	630	6000	Y4501-4	84	4.7	
		2569	714	68		538		10000	Y4506-4	89	7.0	
		3075	854	57		560				86	8.4	
	B	1715	476	70		396	560	6000	Y4005-4	83	4.5	
		2448	680	62		471		10000	Y4505-4	88	6.8	
		2930	814	52		490				85	8.2	
	C	1659	461	66		363	500	6000	Y4004-4	82	4.4	
		2367	658	58		431		10000	Y4504-4	87	6.6	
		2834	787	49		448				84	8.0	
GS500-13M/4		1605	446	76	1480	391	560	6000	Y4005-4	85	4.3	1430
		2290	636	67		465		10000	Y4505-4	90	6.4	
		2745	763	57		490				87	7.8	
	A	1541	428	70		350	500	6000	Y4004-4	84	4.2	
		2198	611	62		416		10000	Y4504-4	89	6.2	
		2635	732	53		439				86	7.6	

Type		Capacity		Head	Speed	Shaft Power	Motor			Eff.	(NPSH)r	Pump Weight
							Power	Volt	Type			
		m^3/h	L/S	m	r/min	k W	k W	V		%	m	Kg
GS500-13M/4	B	1477	410	64	1480	312	450	6000	Y4003-4	83	4.1	1430
		2107	585	57		370		10000	Y4503-4	88	6.1	
		2525	702	48		391				85	7.4	
	C	1412	392	59		276	400	6000	Y4002-4	82	3.9	
		2015	560	52		327		10000	Y4502-4	87	5.9	
		2416	671	44		346				84	7.2	
GS500-19/4		1885	524	56	1480	347	450	6000	Y4003-4	83	6.0	1420
		2690	747	45		371		10000	Y4503-4	89	7.6	
		3220	894	37		382				85	10.6	
	A	1828	508	53		320	400	6000	Y4002-4	82	5.9	
		2609	725	42		342		10000	Y4502-4	88	7.4	
		3123	868	35		353				84	10.4	
	B	1753	487	48		286	355	6000	Y4001-4	81	5.7	
		2502	695	39		305		10000	Y4501-4	87	7.2	
		2995	832	32		315				83	10.1	
	C	1697	471	45		262	315	380	Y355L2-4	80	5.6	
		2421	673	36		280		6000	Y3556-4	86	7.1	
		2898	805	30		289				82	9.9	
GS500-19M/4		1605	446	49	1480	258	355	6000	Y4001-4	83	5.3	1420
		2290	636	42		294		10000	Y4501-4	89	6.8	
		2745	763	35		308				85	9.4	
	A	1541	428	45		231	315	380	Y355L2-4	82	5.2	
		2198	611	39		264		6000	Y3556-4	88	6.6	
		2635	732	32		276				84	9.1	
	B	1477	410	41		206	280	380	Y355L1-4	81	5.0	
		2107	585	36		235		6000	Y3555-4	87	6.4	
		2525	702	30		246				83	8.9	
	C	1412	392	38		183	250	380	Y355M2-4	80	4.9	
		2015	560	33		208		6000	Y3554-4	86	6.2	
		2416	671	27		218				82	8.6	
GS500-27/4		1885	524	37	1480	229	280	380	Y355L1-4	83	6.0	1420
		2690	747	30		247		6000	Y3555-4	89	7.8	
		3095	860	25		245				86	9.6	
	A	1810	503	34		205	250	380	Y355M2-4	82	5.8	
		2582	717	28		221		6000	Y3554-4	88	7.6	
		2971	825	23		219				85	9.3	
	B	1734	482	31		183	220	380	Y355M1-4	81	5.7	
		2475	687	25		197		6000	Y3553-4	87	7.4	
		2847	791	21		195				84	9.1	
GS500-27M/4		1605	446	32	1480	169	220	380	Y355M1-4	83	5.4	1420
		2290	636	26		182		6000	Y3553-4	89	7.0	
		2635	732	22		184				86	8.6	
	A	1541	428	29		151	200	380	Y315L2-4	82	5.3	
		2198	611	24		163				88	6.8	
		2530	703	20		164				85	8.4	
	B	1461	406	26		130	160	380	Y315L1-4	81	5.1	
		2084	579	22		141				87	6.6	
		2398	666	18		142				84	8.1	

Type		Capacity		Head	Speed	Shaft Power	Motor			Eff.	(NPSH)r	Pump Weight
							Power	Volt	Type			
		m^3/h	L/S	m	r/min	k W	k W	V		%	m	Kg
GS500-6/6		1415	393	108	980	502	800	6000	Y5002-6	83	2.6	2400
		2020	561	98		613		10000	Y5005-6	88	4.0	
		2420	672	89		690				85	5.4	
	A	1344	373	97		435	710	6000	Y5001-6	82	2.5	
		1919	533	88		532		10000	Y5004-6	87	3.9	
		2299	639	80		599				84	5.2	
	B	1274	354	87		375	630	6000	Y4504-6	81	2.4	
		1818	505	79		457		10000	Y5003-6	86	3.7	
		2178	605	72		515				83	5.0	
	C	1203	334	78		320	500	6000	Y4502-6	80	2.3	
		1717	477	71		390		10000	Y5001-6	85	3.6	
		2057	571	64		440				82	4.8	
GS500-6M/6		1205	335	99	980	392	630	6000	Y4504-6	83	2.3	2400
		1720	478	90		479		10000	Y5003-6	88	3.5	
		2060	572	82		542				85	4.9	
	A	1133	315	87		329	500	6000	Y4502-6	82	2.2	
		1617	449	80		403		10000	Y5001-6	87	3.4	
		1936	538	72		455				84	4.7	
	B	1085	301	80		293	450	6000	Y4501-6	81	2.1	
		1548	430	73		358		10000	Y4506-6	86	3.3	
		1854	515	66		404				83	4.6	
	C	1024	285	72		250	400	6000	Y4005-6	80	2.1	
		1462	406	65		305		10000	Y4505-6	85	3.1	
		1751	486	59		345				82	4.4	
GS500-9/6		1415	393	69	980	321	450	6000	Y4501-6	83	3.2	1690
		2020	561	60		371		10000	Y4506-6	89	4.5	
		2420	672	51		391				86	5.8	
	A	1344	373	62		278	400	6000	Y4005-6	82	3.1	
		1919	533	54		322		10000	Y4505-6	88	4.3	
		2299	639	46		339				85	5.6	
	B	1274	354	56		239	355	6000	Y4004-6	81	3.0	
		1818	505	49		277		10000	Y4504-6	87	4.2	
		2178	605	41		292				84	5.4	
	C	1189	330	49		197	280	6000	Y4002-6	80	2.8	
		1697	471	42		228		10000	Y4502-6	86	4.0	
		2033	565	36		240				83	5.2	
GS500-9M/6		1205	335	62	980	245	355	6000	Y4004-6	83	2.9	1690
		1720	478	54		284		10000	Y4504-6	89	4.1	
		2060	572	46		300				86	5.2	
	A	1145	318	56		213	315	6000	Y4003-6	82	2.8	
		1634	454	49		247		10000	Y4503-6	88	4.0	
		1957	544	42		260				85	5.0	
	B	1085	301	50		183	250	6000	Y3556-6	81	2.7	
		1548	430	44		212		10000	Y4501-6	87	3.8	
		1854	515	37		224				84	4.8	
	C	1012	281	44		151	220	380	Y355L1-6	80	2.6	
		1445	401	38		174		6000	Y3555-6	86	3.7	
		1730	481	32		184				83	4.6	

Type		Capacity		Head	Speed	Shaft Power	Motor			Eff.	(NPSH)r	Pump Weight
							Power	Volt	Type			
		m^3/h	L/S	m	r/min	k W	k W	V		%	m	Kg
GS500-13/6		1415	393	42	980	191	280	6000	Y4002-6	85	3.2	1470
		2020	561	36		220		10000	Y4502-6	90	4.2	
		2420	672	29		222				86	5.6	
	A	1337	371	38		163	250	6000	Y3556-6	84	3.1	
		1909	530	32		188		10000	Y4501-6	89	4.0	
		2287	635	26		190				85	5.4	
	B	1302	362	36		152	220	380	Y355L1-6	83	3.0	
		1858	516	30		175		6000	Y3555-6	88	4.0	
		2226	618	25		177				84	5.3	
	C	1245	346	33		135	200	380	Y355M3-6	82	2.9	
		1778	494	28		155		6000	Y3554-6	87	3.9	
		2130	592	22		157				83	5.1	
GS500-13M/6		1205	335	37	980	143	200	380	Y355M3-6	85	2.8	1470
		1720	478	32		167		6000	Y3554-6	90	3.7	
		2060	572	26		170				86	5.0	
	A	1133	315	33		120	185	380	Y355M2-6	84	2.7	
		1617	449	28		140		6000	Y3553-6	89	3.6	
		1936	538	23		143				85	4.8	
	B	1109	308	31		114	160	380	Y355M1-6	83	2.6	
		1582	440	27		133				88	3.5	
		1895	526	22		135				84	4.7	
	C	1048	291	28		98	132	380	Y315L2-6	82	2.6	
		1496	416	24		114				87	3.4	
		1792	498	20		116				83	4.6	
GS500-19/6		1415	393	27	980	124	185	380	Y355M2-6	84	3.5	1250
		2020	561	22		135		6000	Y3553-6	90	5.6	
		2320	644	19		138				87	7.6	
	A	1344	373	24		108	160	380	Y355M1-6	83	3.4	
		1919	533	20		117				89	5.4	
		2204	612	17		120				86	7.3	
	B	1302	362	23		99	132	380	Y315L2-6	82	3.3	
		1858	516	19		107				88	5.3	
		2134	593	16		110				85	7.2	
	C	1245	346	21		88	110	380	Y315L1-6	81	3.2	
		1778	494	17		95				87	5.1	
		2042	567	15		97				84	7.0	
GS500-19M/6		1205	335	24	980	93.8	132	380	Y315L2-6	84	3.2	1250
		1720	478	20		104.2				90	5.1	
		1980	550	17		105.4				87	6.9	
	A	1157	321	22		84.0	110	380	Y315L1-6	83	3.1	
		1651	459	18		93.2				89	5.0	
		1901	528	16		94.4				86	6.7	
	B	1109	308	20		74.8	110	380	Y315L1-6	82	3.0	
		1582	440	17		82.9				88	4.8	
		1822	506	14		84.0				85	6.5	
	C	1060	295	19		66.3	90	380	Y315M-6	81	2.9	
		1514	420	15		73.4				87	4.7	
		1742	484	13		74.4				84	6.3	

Type		Capacity		Head	Speed	Shaft Power	Motor			Eff.	(NPSH)r	Pump Weight
							Power	Volt	Type			
		m^3/h	L/S	m	r/min	k W	k W	V		%	m	Kg
GS500-27/6		1415	393	17	980	79.0	90	380	Y315M-6	83	2.9	1370
		2020	561	13		80.4				89	3.7	
		2320	644	10		73.5				86	4.4	
	A	1358	377	16		70.7	90	380	Y315M-6	82	2.8	
		1939	539	12		71.9				88	3.6	
		2227	619	9		65.8				85	4.3	
	B	1302	362	14		63.0	75	380	Y315S-6	81	2.7	
		1858	516	11		64.0				87	3.5	
		2134	593	8		58.6				84	4.2	
GS500-27M/6		1205	335	15	980	59.3	75	380	Y315S-6	83	2.6	1370
		1720	478	12		63.2				89	3.3	
		1980	550	9		56.5				86	4.1	
	A	1157	321	14		53.1	75	380	Y315S-6	82	2.5	
		1651	459	11		56.5				88	3.2	
		1901	528	8		50.5				85	4.0	
	B	1109	308	13		47.4	55	380	Y280M-6	81	2.5	
		1582	440	10		50.3				87	3.1	
		1822	506	8		45.0				84	3.9	
GS600-6/6		2220	617	143	980	1042	1600	6000	Y6301-6	83	3.5	3900
		3170	881	130		1291		10000	Y6302-6	87	5.2	
		3805	1057	119		1452				85	7.2	
	A	2109	586	129		905	1400	6000	Y5603-6	82	3.4	
		3012	837	117		1120		10000	Y6301-6	86	5.0	
		3615	1004	107		1259				84	7.0	
	B	1998	555	116		779	1250	6000	Y5602-6	81	3.3	
		2853	793	105		963		10000	Y5604-6	85	4.8	
		3425	951	96		1084				83	6.7	
	C	1865	518	101		641	1000	6000	Y5004-6	80	3.1	
		2663	740	92		792		10000	Y5602-6	84	4.6	
		3196	888	84		892				82	6.4	
GS600-6M/6		1885	524	127	980	786	1250	6000	Y5602-6	83	3.1	3900
		2690	747	116		977		10000	Y5604-6	87	4.7	
		3228	897	106		1097				85	6.5	
	A	1781	495	113		671	1000	6000	Y5004-6	82	3.0	
		2542	706	104		834		10000	Y5602-6	86	4.5	
		3050	847	95		937				84	6.3	
	B	1697	471	103		587	900	6000	Y5003-6	81	2.9	
		2421	673	94		729		10000	Y5601-6	85	4.4	
		2905	807	86		819				83	6.1	
	C	1602	445	92		501	800	6000	Y5002-6	80	2.8	
		2287	635	84		622		10000	Y5005-6	84	4.2	
		2744	762	77		698				82	5.8	
GS600-9/6		2220	617	89	980	649	900	6000	Y5003-6	83	4.2	3200
		3170	881	78		757		10000	Y5601-6	89	5.8	
		3805	1057	66		787				87	7.5	
	A	2109	586	80		563	800	6000	Y5002-6	82	4.1	
		3012	837	70		656		10000	Y5005-6	88	5.6	
		3615	1004	60		682				86	7.2	

Type		Capacity		Head	Speed	Shaft Power	Motor			Eff.	(NPSH)r	Pump Weight
							Power	Volt	Type			
		m^3/h	L/S	m	r/min	k W	k W	V		%	m	Kg
GS600-9/6	B	1998	555	72	980	485	710	6000	Y5001-6	81	3.9	3200
		2853	793	63		565		10000	Y5004-6	87	5.4	
		3425	951	53		587				85	7.0	
	C	1887	524	64		413	560	6000	Y4503-6	80	3.8	
		2695	748	56		481		10000	Y5002-6	86	5.2	
		3234	898	48		500				84	6.7	
GS600-9M/6		1885	524	82	980	507	710	6000	Y5001-6	83	3.9	3200
		2690	747	72		593		10000	Y5004-6	89	5.4	
		3228	897	61		617				87	6.9	
	A	1772	492	72		427	630	6000	Y4504-6	82	3.7	
		2529	702	64		498		10000	Y5003-6	88	5.2	
		3034	843	54		518				86	6.6	
	B	1697	471	66		379	560	6000	Y4503-6	81	3.6	
		2421	673	58		442		10000	Y5002-6	87	5.0	
		2905	807	49		460				85	6.4	
	C	1602	445	59		323	450	6000	Y4501-6	80	3.5	
		2287	635	52		377		10000	Y4506-6	86	4.8	
		2744	762	44		392				84	6.2	
GS600-13/6		2220	617	56	980	403	560	6000	Y4503-6	84	4.2	2630
		3170	881	47		451		10000	Y5002-6	90	5.4	
		3645	1013	41		474				86	7.0	
	A	2131	592	52		361	500	6000	Y4502-6	83	4.1	
		3043	845	43		404		10000	Y5001-6	89	5.3	
		3499	972	38		424				85	6.8	
	B	2042	567	47		322	450	6000	Y4501-6	82	4.0	
		2916	810	40		359		10000	Y4506-6	88	5.1	
		3353	932	35		378				84	6.6	
	C	1954	543	43		285	400	6000	Y4005-6	81	3.9	
		2790	775	36		318		10000	Y4505-6	87	5.0	
		3208	891	32		334				83	6.4	
GS600-13M/6		1885	524	51	980	312	400	6000	Y4005-6	84	3.8	2630
		2690	747	43		350		10000	Y4505-6	90	4.9	
		3090	858	37		362				86	6.4	
	A	1810	503	47		279	400	6000	Y4005-6	83	3.7	
		2582	717	40		313		10000	Y4505-6	89	4.8	
		2966	824	34		324				85	6.2	
	B	1734	482	43		249	355	6000	Y4004-6	82	3.6	
		2475	687	36		279		10000	Y4504-6	88	4.6	
		2843	790	31		289				84	6.1	
	C	1659	461	39		220	315	6000	Y4003-6	81	3.5	
		2367	658	33		247		10000	Y4503-6	87	4.5	
		2719	755	29		256				83	5.9	
GS600-19/6		2220	617	37	980	270	355	6000	Y4004-6	83	5.0	1930
		3170	881	32		307		10000	Y4504-6	90	7.4	
		3645	1013	26		300				86	10.6	
	A	2131	592	34		242	315	6000	Y4003-6	82	4.9	
		3043	845	29		275		10000	Y4503-6	89	7.2	
		3499	972	24		269				85	10.3	

Type		Capacity		Head	Speed	Shaft Power	Motor			Eff.	(NPSH)r	Pump Weight
							Power	Volt	Type			
		m^3/h	L/S	m	r/min	k W	k W	V		%	m	Kg
GS600-19/6	B	2042	567	31	980	215	280	6000	Y4002-6	81	4.7	1930
		2916	810	27		245		10000	Y4502-6	88	7.0	
		3353	932	22		239				84	10.0	
	C	1954	543	29		191	250	6000	Y3556-6	80	4.6	
		2790	775	25		217		10000	Y4501-6	87	6.8	
		3208	891	20		212				83	9.7	
GS600-19M/6		1885	524	32	980	200	280	6000	Y4002-6	82	4.4	1930
		2690	747	28		231		10000	Y4502-6	89	6.5	
		3090	858	22		218				85	9.3	
	A	1810	503	29		180	250	6000	Y3556-6	81	4.3	
		2582	717	26		206		10000	Y4501-6	88	6.3	
		2966	824	20		195				84	9.1	
	B	1734	482	27		160	220	380	Y355L1-6	80	4.2	
		2475	687	24		184		6000	Y3555-6	87	6.1	
		2843	790	19		174				83	8.8	
	C	1659	461	25		142	200	380	Y355M3-6	79	4.0	
		2367	658	22		163		6000	Y3554-6	86	6.0	
		2719	755	17		154				82	8.5	
GS600-23/6		2220	617	28	980	202	250	6000	Y3556-6	84	5.4	1670
		3170	881	22		211		10000	Y4501-6	90	6.8	
		3645	1013	17		196				86	8.9	
	A	2131	592	26		181	220	380	Y355L1-6	83	5.3	
		3043	845	20		189		6000	Y3555-6	89	6.6	
		3499	972	16		176				85	8.7	
	B	2042	567	24		161	200	380	Y355M3-6	82	5.1	
		2916	810	19		168		6000	Y3554-6	88	6.4	
		3353	932	14		157				84	8.4	
GS600-23M/6		1885	524	25	980	153	200	380	Y355M3-6	84	4.9	1670
		2690	747	20		163		6000	Y3554-6	90	6.2	
		3090	858	15		147				86	8.1	
	A	1791	497	23		133	160	380	Y355M1-6	83	4.7	
		2556	710	18		141				89	6.0	
		2936	815	14		127				85	7.8	
	B	1678	466	20		110	132	380	Y315L2-6	82	4.5	
		2394	665	16		117				88	5.7	
		2750	764	12		106				84	7.5	
GS700-9/6		3290	914	125	980	1350	2000	6000	Y6303-6	83	5.2	4600
		4700	1306	110		1583		10000	Y710-6	89	7.3	
		5640	1567	94		1661				87	9.2	
	A	3109	864	112		1153	1600	6000	Y6301-6	82	5.0	
		4442	1234	98		1351		10000	Y6302-6	88	7.0	
		5330	1481	84		1418				86	8.9	
	B	2961	823	101		1009	1400	6000	Y5603-6	81	4.8	
		4230	1175	89		1180		10000	Y6301-6	87	6.8	
		5076	1410	76		1239				85	8.6	
	C	2797	777	90		860	1250	6000	Y5602-6	80	4.7	
		3995	1110	79		1006		10000	Y5604-6	86	6.6	
		4794	1332	68		1056				84	8.3	

Type		Capacity		Head	Speed	Shaft Power	Motor			Eff.	(NPSH)r	Pump Weight
							Power	Volt	Type			
		m^3/h	L/S	m	r/min	k W	k W	V		%	m	Kg
GS700-9M/6		2855	793	114	980	1069	1600	6000	Y6301-6	83	5.2	4600
		4000	1111	100		1225		10000	Y6302-6	89	6.6	
		4895	1360	85		1303				87	8.4	
	A	2684	745	101		898	1250	6000	Y5602-6	82	5.0	
		3760	1044	88		1029		10000	Y5604-6	88	6.3	
		4601	1278	75		1095				86	8.1	
	B	2570	714	92		798	1120	6000	Y5601-6	81	4.8	
		3600	1000	81		913		10000	Y5603-6	87	6.2	
		4406	1224	69		972				85	7.8	
	C	2427	674	82		681	1000	6000	Y5004-6	80	4.7	
		3400	944	72		778		10000	Y5602-6	86	5.9	
		4161	1156	61		829				84	7.5	
GS700-13/6		3290	914	70	980	738	1000	6000	Y5004-6	85	4.4	4000
		4700	1306	60		844		10000	Y5602-6	91	6.7	
		5640	1567	52		908				88	8.5	
	A	3158	877	65		661	900	6000	Y5003-6	84	4.3	
		4512	1253	55		755		10000	Y5601-6	90	6.5	
		5414	1504	48		813				87	8.3	
	B	3027	841	59		589	800	6000	Y5002-6	83	4.2	
		4324	1201	51		672		10000	Y5005-6	89	6.3	
		5189	1441	44		724				86	8.0	
	C	2895	804	54		522	710	6000	Y5001-6	82	4.0	
		4136	1149	46		595		10000	Y5004-6	88	6.2	
		4963	1379	40		641				85	7.8	
GS700-13M/6		2794	776	65	980	582	800	6000	Y5002-6	85	3.9	4000
		4000	1111	56		671		10000	Y5005-6	91	6.0	
		4790	1331	48		712				88	7.7	
	A	2682	745	60		521	710	6000	Y5001-6	84	3.8	
		3840	1067	52		600		10000	Y5004-6	90	5.8	
		4598	1277	44		637				87	7.5	
	B	2570	714	55		464	630	6000	Y4504-6	83	3.7	
		3680	1022	47		534		10000	Y5003-6	89	5.7	
		4407	1224	41		567				86	7.3	
	C	2459	683	50		411	560	6000	Y4503-6	82	3.6	
		3520	978	43		473		10000	Y5002-6	88	5.5	
		4215	1171	37		502				85	7.1	
GS700-19/6		3290	914	43	980	459	630	6000	Y4504-6	84	6.0	3500
		4700	1306	37		527		10000	Y5003-6	90	7.8	
		5640	1567	28		495				87	9.3	
	A	3158	877	40		411	560	6000	Y4503-6	83	5.8	
		4512	1253	34		471		10000	Y5002-6	89	7.6	
		5414	1504	26		443				86	9.1	
	B	2994	832	36		354	450	6000	Y4501-6	82	5.6	
		4277	1188	31		406		10000	Y4506-6	88	7.3	
		5132	1426	23		382				85	8.7	
	C	2862	795	33		313	400	6000	Y4005-6	81	5.5	
		4089	1136	28		359		10000	Y4505-6	87	7.1	
		4907	1363	21		337				84	8.5	

Type		Capacity		Head	Speed	Shaft Power	Motor			Eff.	(NPSH)r	Pump Weight
							Power	Volt	Type			
		m^3/h	L/S	m	r/min	k W	k W	V		%	m	Kg
GS700-19M/6		2844	790	39	980	360	500	6000	Y4502-6	84	5.5	3500
		4000	1111	34		412		10000	Y5001-6	90	7.2	
		4876	1354	26		397				87	8.7	
	A	2730	758	36		322	450	6000	Y4501-6	83	5.4	
		3840	1067	31		368		10000	Y4506-6	89	7.0	
		4681	1300	24		355				86	8.5	
	B	2616	727	33		287	400	6000	Y4005-6	82	5.2	
		3680	1022	29		328		10000	Y4505-6	88	6.8	
		4486	1246	22		316				85	8.2	
	C	2503	695	30		254	355	6000	Y4004-6	81	5.1	
		3520	978	26		290		10000	Y4504-6	87	6.6	
		4291	1192	20		280				84	8.0	
GS700-23/6		3290	914	35	980	374	450	6000	Y4501-6	84	6.9	3000
		4700	1306	28		398		10000	Y4506-6	90	8.3	
		5405	1501	21		360				86	9.5	
	A	3158	877	32		334	400	6000	Y4005-6	83	6.7	
		4512	1253	26		356		10000	Y4505-6	89	8.1	
		5189	1441	19		322				85	9.2	
	B	3027	841	30		298	355	6000	Y4004-6	82	6.5	
		4324	1201	24		317		10000	Y4504-6	88	7.9	
		4973	1381	18		287				84	9.0	
GS700-23M/6		2800	778	33	980	300	355	6000	Y4004-6	84	6.3	3000
		4000	1111	26		315		10000	Y4504-6	90	7.5	
		4600	1278	20		292				86	8.7	
	A	2688	747	30		268	315	6000	Y4003-6	83	6.1	
		3840	1067	24		282		10000	Y4503-6	89	7.3	
		4416	1227	18		261				85	8.5	
	B	2576	716	28		239	280	6000	Y4002-6	82	6.0	
		3680	1022	22		251		10000	Y4502-6	88	7.1	
		4232	1176	17		232				84	8.2	
GS700-27/6		3290	914	31	980	331	400	6000	Y4005-6	84	6.1	3200
		4700	1306	24		342		10000	Y4505-6	90	7.0	
		5640	1567	20		353				87	8.8	
	A	3158	877	29		296	355	6000	Y4004-6	83	5.9	
		4512	1253	22		306		10000	Y4504-6	89	6.8	
		5414	1504	18		316				86	8.6	
	B	3027	841	26		264	315	6000	Y4003-6	82	5.8	
		4324	1201	20		272		10000	Y4503-6	88	6.6	
		5189	1441	17		282				85	8.3	
GS700-27M/6		2800	778	27	980	245	315	6000	Y4003-6	84	5.3	3200
		4000	1111	21		254		10000	Y4503-6	90	6.1	
		4800	1333	17		256				87	7.7	
	A	2688	747	25		220	280	6000	Y4002-6	83	5.2	
		3840	1067	19		228		10000	Y4502-6	89	5.9	
		4608	1280	16		229				86	7.5	
	B	2576	716	23		196	250	6000	Y3556-6	82	5.0	
		3680	1022	18		203		10000	Y4501-6	88	5.8	
		4416	1227	14		204				85	7.3	

Type		Capacity		Head	Speed	Shaft Power	Motor			Eff.	(NPSH)r	Pump Weight
							Power	Volt	Type			
		m^3/h	L/S	m	r/min	k W	k W	V		%	m	Kg
GS700–32/6		3740	1039	22	980	270	355	6000	Y4004–6	83	6.3	3400
		4700	1306	19		277		10000	Y4504–6	88	7.0	
		5470	1519	13		228				85	8.6	
	A	3590	997	20		242	315	6000	Y4003–6	82	6.1	
		4512	1253	18		247		10000	Y4503–6	87	6.8	
		5251	1459	12		204				84	8.4	
GS700–32M/6		3180	883	20	980	209	280	6000	Y4002–6	83	5.6	3400
		4000	1111	17		211		10000	Y4502–6	88	6.3	
		4660	1294	12		179				85	7.7	
	A	3053	848	18		187	250	6000	Y3556–6	82	5.4	
		3840	1067	16		188		10000	Y4501–6	87	6.1	
		4474	1243	11		160				84	7.5	
GS800–9/6		4550	1264	138	980	2037	2800	6000	Y710–6	84	5.9	6400
		6500	1806	120		2388		10000	Y800–6	89	8.3	
		7800	2167	104		2512				88	10.6	
	A	4323	1201	125		1767	2500	6000	Y710–6	83	5.7	
		6175	1715	108		2071		10000	Y710–6	88	8.0	
		7410	2058	94		2178				87	10.2	
	B	4050	1125	109		1471	2000	6000	Y6303–6	82	5.5	
		5785	1607	95		1722		10000	Y710–6	87	7.7	
		6942	1928	82		1812				86	9.8	
	C	3868	1074	100		1297	1800	6000	Y6302–6	81	5.3	
		5525	1535	87		1518		10000	Y6303–6	86	7.4	
		6630	1842	75		1597				85	9.5	
GS800–9M/6		3850	1069	132	980	1649	2500	6000	Y710–6	84	5.4	6400
		5500	1528	115		1937		10000	Y710–6	89	7.4	
		6600	1833	100		2044				88	9.6	
	A	3735	1037	124		1523	2240	6000	Y710–6	83	5.3	
		5335	1482	108		1788		10000	Y710–6	88	7.3	
		6402	1778	94		1887				87	9.4	
	B	3465	963	107		1231	1800	6000	Y6302–6	82	5.0	
		4950	1375	93		1444		10000	Y6303–6	87	6.9	
		5940	1650	81		1525				86	8.9	
	C	3273	909	95		1050	1600	6000	Y6301–6	81	4.8	
		4675	1299	83		1231		10000	Y6302–6	86	6.6	
		5610	1558	72		1299				85	8.6	
GS800–13/6		4550	1264	90	980	1313	1800	6000	Y6302–6	85	5.4	5700
		6500	1806	78		1518		10000	Y6303–6	91	8.4	
		7800	2167	66		1594				88	10.6	
	A	4368	1213	83		1175	1600	6000	Y6301–6	84	5.3	
		6240	1733	72		1358		10000	Y6302–6	90	8.2	
		7488	2080	61		1427				87	10.3	
	B	4186	1163	76		1047	1400	6000	Y5603–6	83	5.1	
		5980	1661	66		1209		10000	Y6301–6	89	7.9	
		7176	1993	56		1270				86	10.0	
	C	4004	1112	70		927	1250	6000	Y5602–6	82	5.0	
		5720	1589	60		1070		10000	Y5604–6	88	7.7	
		6864	1907	51		1125				85	9.7	

Type		Capacity		Head	Speed	Shaft Power	Motor			Eff.	(NPSH)r	Pump Weight
							Power	Volt	Type			
		m^3/h	L/S	m	r/min	k W	k W	V		%	m	Kg
GS800–13M/6		3850	1069	80	980	987	1400	6000	Y5603–6	85	4.7	5700
		5500	1528	70		1153		10000	Y6301–6	91	7.1	
		6600	1833	60		1226				88	9.0	
	A	3696	1027	74		884	1250	6000	Y5602–6	84	4.6	
		5280	1467	65		1031		10000	Y5604–6	90	6.9	
		6336	1760	55		1097				87	8.8	
	B	3542	984	68		787	1120	6000	Y5601–6	83	4.4	
		5060	1406	59		918		10000	Y5603–6	89	6.7	
		6072	1687	51		977				86	8.5	
	C	3311	920	59		651	900	6000	Y5003–6	82	4.3	
		4730	1314	52		758		10000	Y5601–6	88	6.4	
		5676	1577	44		807				85	8.1	
GS800–19/6		4550	1264	54	980	797	1120	6000	Y5601–6	84	6.5	5200
		6500	1806	47		925		10000	Y5603–6	90	8.6	
		7800	2167	36		880				87	10.4	
	A	4323	1201	49		692	900	6000	Y5003–6	83	6.3	
		6175	1715	42		802		10000	Y5601–6	89	8.3	
		7410	2058	32		763				86	10.1	
	B	4141	1150	45		615	800	6000	Y5002–6	82	6.1	
		5915	1643	39		713		10000	Y5005–6	88	8.1	
		7098	1972	30		678				85	9.8	
	C	3959	1100	41		544	710	6000	Y5001–6	81	5.9	
		5655	1571	36		630		10000	Y5004–6	87	7.8	
		6786	1885	27		600				84	9.5	
GS800–19M/6		3850	1069	48	980	600	800	6000	Y5002–6	84	5.8	5200
		5500	1528	42		699		10000	Y5005–6	90	7.7	
		6600	1833	32		662				87	9.3	
	A	3696	1027	44		537	710	6000	Y5001–6	83	5.6	
		5280	1467	39		626		10000	Y5004–6	89	7.5	
		6336	1760	29		592				86	9.1	
	B	3542	984	41		478	630	6000	Y4504–6	82	5.5	
		5060	1406	36		557		10000	Y5003–6	88	7.3	
		6072	1687	27		527				85	8.8	
	C	3388	941	37		424	560	6000	Y4503–6	81	5.3	
		4840	1344	33		493		10000	Y5002–6	87	7.1	
		5808	1613	25		467				84	8.5	
GS800–23/6		4550	1264	45	980	672	800	6000	Y5002–6	83	7.2	4800
		6500	1806	36		709		10000	Y5005–6	90	9.1	
		7475	2076	28		648				88	10.5	
	A	4368	1213	41		602	710	6000	Y5001–6	82	7.0	
		6240	1733	33		634		10000	Y5004–6	89	8.9	
		7176	1993	26		580				87	10.2	
	B	4186	1163	38		536	630	6000	Y4504–6	81	6.8	
		5980	1661	30		564		10000	Y5003–6	88	8.6	
		6877	1910	24		516				86	9.9	
GS800–23M/6		3855	1071	40	980	506	630	6000	Y4504–6	83	6.5	4800
		5500	1528	32		533		10000	Y5003–6	90	8.1	
		6325	1757	25		490				88	9.4	

Type		Capacity		Head	Speed	Shaft Power	Motor			Eff.	(NPSH)r	Pump Weight
							Power	Volt	Type			
		m^3/h	L/S	m	r/min	k W	k W	V		%	m	Kg
GS800-23M/6	A	3701	1028	37	980	453	560	6000	Y4503-6	82	6.3	4800
		5280	1467	29		477		10000	Y5002-6	89	7.9	
		6072	1687	23		438				87	9.1	
	B	3547	985	34		404	500	6000	Y4502-6	81	6.1	
		5060	1406	27		424		10000	Y5001-6	88	7.7	
		5819	1616	21		390				86	8.9	
GS800-27/6		4550	1264	38	980	575	710	6000	Y5001-6	82	7.5	5200
		6500	1806	30		590		10000	Y5004-6	90	8.5	
		7800	2167	24		586				87	10.7	
	A	4368	1213	35		515	630	6000	Y4504-6	81	7.3	
		6240	1733	28		528		10000	Y5003-6	89	8.3	
		7488	2080	22		525				86	10.4	
	B	4186	1163	32		459	560	6000	Y4503-6	80	7.1	
		5980	1661	25		470		10000	Y5002-6	88	8.0	
		7176	1993	20		467				85	10.1	
GS800-27M/6		3850	1069	33	980	422	500	6000	Y4502-6	82	6.5	5200
		5500	1528	26		433		10000	Y5001-6	90	7.3	
		6600	1833	21		434				87	9.3	
	A	3696	1027	30		378	450	6000	Y4501-6	81	6.3	
		5280	1467	24		387		10000	Y4506-6	89	7.1	
		6336	1760	19		389				86	9.1	
	B	3542	984	28		337	400	6000	Y4005-6	80	6.1	
		5060	1406	22		345		10000	Y4505-6	88	6.9	
		6072	1687	18		346				85	8.8	
GS800-32/6		5170	1436	28	980	470	560	6000	Y4503-6	84	7.8	5400
		6500	1806	23		463		10000	Y5002-6	88	8.9	
		7565	2101	16		388				85	10.5	
	A	4963	1379	26		420	500	6000	Y4502-6	83	7.6	
		6240	1733	21		414		10000	Y5001-6	87	8.7	
		7262	2017	15		347				84	10.2	
GS800-32M/6		4380	1217	25	980	355	450	6000	Y4501-6	84	7.1	5400
		5500	1528	21		358		10000	Y4506-6	88	8.1	
		6400	1778	14		287				85	9.6	
	A	4205	1168	23		318	400	6000	Y4005-6	83	6.9	
		5280	1467	19		320		10000	Y4505-6	87	7.9	
		6144	1707	13		257				84	9.3	
GS800-9/8		4550	1264	104	740	1517	2240	6000	Y710-8	85	4.6	9100
		6500	1806	90		1771		10000	Y800-8	90	6.2	
		7800	2167	78		1884				88	7.8	
	A	4277	1188	92		1275	1800	6000	Y710-8	84	4.4	
		6110	1697	80		1488		10000	Y710-8	89	5.9	
		7332	2037	69		1583				87	7.5	
	B	4095	1138	84		1133	1600	6000	Y6304-8	83	4.3	
		5850	1625	73		1321		10000	Y710-8	88	5.8	
		7020	1950	63		1405				86	7.3	
	C	3868	1074	75		966	1400	6000	Y6303-8	82	4.1	
		5525	1535	65		1125		10000	Y710-8	87	5.6	
		6630	1842	56		1198				85	7.0	

Type		Capacity		Head	Speed	Shaft Power	Motor			Eff.	(NPSH)r	Pump Weight
							Power	Volt	Type			
		m^3/h	L/S	m	r/min	k W	k W	V		%	m	Kg
GS800-9M/8		3850	1069	92	740	1136	1600	6000	Y6304-8	85	4.2	9100
		5500	1528	80		1332		10000	Y710-8	90	5.6	
		6600	1833	70		1431				88	7.0	
	A	3658	1016	83		985	1400	6000	Y6303-8	84	4.1	
		5225	1451	72		1155		10000	Y710-8	89	5.4	
		6270	1742	63		1241				87	6.8	
	B	3465	963	75		848	1250	6000	Y6302-8	83	3.9	
		4950	1375	65		993		10000	Y6303-8	88	5.2	
		5940	1650	57		1067				86	6.5	
	C	3234	898	65		698	1000	6000	Y5603-8	82	3.7	
		4620	1283	56		817		10000	Y6301-8	87	5.0	
		5544	1540	49		878				85	6.2	
GS800-13/8		4550	1264	61	740	890	1250	6000	Y6302-8	85	4.2	6500
		6500	1806	53		1032		10000	Y6303-8	91	6.3	
		7800	2167	45		1075				89	7.7	
	A	4368	1213	56		797	1120	6000	Y6301-8	84	4.1	
		6240	1733	49		923		10000	Y6302-8	90	6.1	
		7488	2080	41		962				88	7.5	
	B	4186	1163	52		710	1000	6000	Y5603-8	83	4.0	
		5980	1661	45		821		10000	Y6301-8	89	6.0	
		7176	1993	38		856				87	7.3	
	C	3913	1087	45		587	800	6000	Y5601-8	82	3.8	
		5590	1553	39		679		10000	Y5603-8	88	5.7	
		6708	1863	33		707				86	7.0	
GS800-13M/8		3850	1069	55	740	679	900	6000	Y5602-8	85	3.8	6500
		5500	1528	48		791		10000	Y5604-8	91	5.6	
		6600	1833	40		808				89	7.0	
	A	3696	1027	51		608	800	6000	Y5601-8	84	3.7	
		5280	1467	44		707		10000	Y5603-8	90	5.4	
		6336	1760	37		723				88	6.8	
	B	3542	984	47		541	710	6000	Y5004-8	83	3.6	
		5060	1406	41		629		10000	Y5602-8	89	5.3	
		6072	1687	34		644				87	6.6	
	C	3388	941	43		480	630	6000	Y5003-8	82	3.5	
		4840	1344	37		557		10000	Y5601-8	88	5.1	
		5808	1613	31		570				86	6.4	
GS800-19/8		4550	1264	39	740	576	800	6000	Y5601-8	84	5.2	5900
		6500	1806	34		669		10000	Y5603-8	90	6.9	
		7800	2167	26		635				87	8.1	
	A	4368	1213	36		515	710	6000	Y5004-8	83	5.1	
		6240	1733	31		599		10000	Y5602-8	89	6.7	
		7488	2080	24		569				86	7.9	
	B	4186	1163	33		459	630	6000	Y5003-8	82	4.9	
		5980	1661	29		533		10000	Y5601-8	88	6.5	
		7176	1993	22		506				85	7.7	
	C	4004	1112	30		407	560	6000	Y5002-8	81	4.8	
		5720	1589	26		472		10000	Y5006-8	87	6.3	
		6864	1907	20		448				84	7.4	

Type		Capacity		Head	Speed	Shaft Power	Motor			Eff.	(NPSH)r	Pump Weight
							Power	Volt	Type			
		m^3/h	L/S	m	r/min	k W	k W	V		%	m	Kg
GS800-19M/8		3850	1069	37	740	462	630	6000	Y5003-8	84	4.9	5900
		5500	1528	32		533		10000	Y5601-8	90	6.5	
		6600	1833	25		517				87	7.6	
	A	3696	1027	34		414	560	6000	Y5002-8	83	4.8	
		5280	1467	29		477		10000	Y5006-8	89	6.3	
		6336	1760	23		463				86	7.4	
	B	3542	984	31		369	500	6000	Y5001-8	82	4.6	
		5060	1406	27		424		10000	Y5005-8	88	6.1	
		6072	1687	21		412				85	7.2	
	C	3388	941	29		327	450	6000	Y4504-8	81	4.5	
		4840	1344	25		376		10000	Y5004-8	87	6.0	
		5808	1613	19		365				84	7.0	
GS800-23/8		4550	1264	30	740	438	560	6000	Y5002-8	85	5.9	5500
		6500	1806	24		472		10000	Y5006-8	90	7.2	
		7475	2076	18		426				86	8.7	
	A	4277	1188	27		368	450	6000	Y4504-8	84	5.7	
		6110	1697	21		397		10000	Y5004-8	89	6.9	
		7027	1952	16		358				85	8.3	
	B	4095	1138	24		327	400	6000	Y4503-8	83	5.5	
		5850	1625	19		352		10000	Y5003-8	88	6.7	
		6728	1869	15		318				84	8.1	
GS800-23M/8		3850	1069	27	740	333	450	6000	Y4504-8	85	5.4	5500
		5500	1528	22		366		10000	Y5004-8	90	6.5	
		6320	1756	17		340				86	8.0	
	A	3696	1027	25		298	400	6000	Y4503-8	84	5.3	
		5280	1467	20		328		10000	Y5003-8	89	6.3	
		6067	1685	16		305				85	7.8	
	B	3542	984	23		266	355	6000	Y4502-8	83	5.1	
		5060	1406	19		292		10000	Y5002-8	88	6.1	
		5814	1615	14		271				84	7.6	
GS900-13/81		6300	1750	74	740	1477	2240	6000	Y710-8	86	5.0	8500
		9000	2500	66		1779		10000	Y800-8	91	7.6	
		10800	3000	56		1873				88	9.4	
	A	6048	1680	68		1322	2000	6000	Y710-8	85	4.9	
		8640	2400	61		1591		10000	Y800-8	90	7.4	
		10368	2880	52		1676				87	9.1	
	B	5733	1593	61		1140	1600	6000	Y6304-8	84	4.7	
		8190	2275	55		1371		10000	Y710-8	89	7.1	
		9828	2730	46		1444				86	8.8	
	C	5481	1523	56		1008	1400	6000	Y6303-8	83	4.6	
		7830	2175	50		1211		10000	Y710-8	88	6.9	
		9396	2610	42		1277				85	8.6	
GS900-13M/8		5320	1478	66	740	1113	1600	6000	Y6304-8	86	4.5	8500
		7600	2111	59		1343		10000	Y710-8	91	6.9	
		9120	2533	50		1412				88	8.4	
	A	5107	1419	61		996	1400	6000	Y6303-8	85	4.4	
		7296	2027	54		1201		10000	Y710-8	90	6.7	
		8755	2432	46		1264				87	8.2	

Type		Capacity		Head	Speed	Shaft Power	Motor			Eff.	(NPSH)r	Pump Weight
							Power	Volt	Type			
		m^3/h	L/S	m	r/min	k W	k W	V		%	m	Kg
GS900-13M/8	B	4894	1360	56	740	887	1250	6000	Y6302-8	84	4.3	8500
		6992	1942	50		1069		10000	Y6303-8	89	6.5	
		8390	2331	42		1125				86	7.9	
	C	4682	1300	51		786	1120	6000	Y6301-8	83	4.1	
		6688	1858	46		946		10000	Y6302-8	88	6.3	
		8026	2229	39		996				85	7.7	
GS900-19/8		6300	1750	50	740	1022	1400	6000	Y6303-8	84	6.4	7800
		9000	2500	44		1186		10000	Y710-8	91	8.3	
		10800	3000	34		1150				87	10.0	
	A	6048	1680	46		915	1250	6000	Y6302-8	83	6.2	
		8640	2400	41		1061		10000	Y6303-8	90	8.1	
		10368	2880	31		1029				86	9.7	
	B	5796	1610	42		815	1120	6000	Y6301-8	82	6.1	
		8280	2300	37		944		10000	Y6302-8	89	7.9	
		9936	2760	29		917				85	9.5	
	C	5544	1540	39		722	1000	6000	Y5603-8	81	5.9	
		7920	2200	34		836		10000	Y6301-8	88	7.6	
		9504	2640	26		812				84	9.2	
GS900-19M/8		5320	1478	44	740	759	1120	6000	Y6301-8	84	5.8	7800
		7600	2111	40		910		10000	Y6302-8	91	7.5	
		9120	2533	31		886				87	9.1	
	A	5054	1404	40		659	900	6000	Y5602-8	83	5.6	
		7220	2006	36		789		10000	Y5604-8	90	7.2	
		8664	2407	28		768				86	8.8	
	B	4841	1345	36		586	800	6000	Y5601-8	82	5.4	
		6916	1921	33		701		10000	Y5603-8	89	7.0	
		8299	2305	26		683				85	8.5	
	C	4628	1286	33		519	710	6000	Y5004-8	81	5.3	
		6612	1837	30		620		10000	Y5602-8	88	6.8	
		7934	2204	23		604				84	8.3	
GS900-23/8		6300	1750	36	740	736	900	6000	Y5602-8	84	7.1	7200
		9000	2500	29		790		10000	Y5604-8	90	8.7	
		10350	2875	22		721				86	9.8	
	A	6048	1680	33		659	800	6000	Y5601-8	83	6.9	
		8640	2400	27		707		10000	Y5603-8	89	8.5	
		9936	2760	20		646				85	9.5	
	B	5796	1610	30		587	710	6000	Y5004-8	82	6.7	
		8280	2300	25		629		10000	Y5602-8	88	8.2	
		9522	2645	19		575				84	9.3	
GS900-23M/8		5320	1478	34	740	587	710	6000	Y5004-8	84	6.5	7200
		7600	2111	27		621		10000	Y5602-8	90	7.9	
		8740	2428	21		582				86	9.0	
	A	5107	1419	31		525	630	6000	Y5003-8	83	6.3	
		7296	2027	25		556		10000	Y5601-8	89	7.7	
		8390	2331	19		521				85	8.8	
	B	4894	1360	29		468	560	6000	Y5002-8	82	6.1	
		6992	1942	23		495		10000	Y5006-8	88	7.5	
		8041	2234	18		464				84	8.5	

Type		Capacity		Head	Speed	Shaft Power	Motor			Eff.	(NPSH)r	Pump Weight
							Power	Volt	Type			
		m^3/h	L/S	m	r/min	k W	k W	V		%	m	Kg
GS900-27/8		6300	1750	31	740	641	800	6000	Y5601-8	83	6.4	7440
		9000	2500	24		654		10000	Y5603-8	90	7.0	
		10800	3000	19		643				87	9.0	
	A	6048	1680	29		574	710	6000	Y5004-8	82	6.2	
		8640	2400	22		585		10000	Y5602-8	89	6.8	
		10368	2880	18		575				86	8.8	
	B	5796	1610	26		512	630	6000	Y5003-8	81	6.1	
		8280	2300	20		521		10000	Y5601-8	88	6.6	
		9936	2760	16		512				85	8.5	
GS900-27M/8		5320	1478	29	740	507	630	6000	Y5003-8	83	5.9	7440
		7600	2111	22		506		10000	Y5601-8	90	6.4	
		9120	2533	18		514				87	8.2	
	A	5107	1419	27		454	560	6000	Y5002-8	82	5.7	
		7296	2027	20		453		10000	Y5006-8	89	6.2	
		8755	2432	17		460				86	8.0	
	B	4894	1360	25		404	500	6000	Y5001-8	81	5.6	
		6992	1942	19		403		10000	Y5005-8	88	6.1	
		8390	2331	15		410				85	7.8	
GS1000-13/10		9100	2528	72	595	2052	3150	6000	Y900-10	87	4.4	13400
		13000	3611	65		2503		10000	Y1000-10	92	6.8	
		15600	4333	55		2627				89	8.6	
	A	8827	2452	68		1895	2800	6000	Y800-10	86	4.3	
		12610	3503	61		2309		10000	Y900-10	91	6.7	
		15132	4203	52		2425				88	8.4	
	B	8463	2351	62		1690	2500	6000	Y800-10	85	4.2	
		12090	3358	56		2058		10000	Y900-10	90	6.5	
		14508	4030	48		2162				87	8.2	
	C	7917	2199	54		1400	2000	6000	Y710-10	84	4.0	
		11310	3142	49		1704		10000	Y800-10	89	6.2	
		13572	3770	42		1790				86	7.8	
GS1000-13M/10		7700	2139	62	595	1495	2240	6000	Y800-10	87	4.0	13400
		11000	3056	56		1825		10000	Y800-10	92	6.1	
		13200	3667	47		1900				89	7.7	
	A	7469	2075	58		1381	2000	6000	Y710-10	86	3.9	
		10670	2964	53		1684		10000	Y800-10	91	6.0	
		12804	3557	44		1753				88	7.5	
	B	7161	1989	54		1231	1800	6000	Y710-10	85	3.8	
		10230	2842	48		1500		10000	Y800-10	90	5.8	
		12276	3410	41		1563				87	7.3	
	C	6853	1904	49		1092	1600	6000	Y710-10	84	3.7	
		9790	2719	44		1330		10000	Y710-10	89	5.6	
		11748	3263	37		1386				86	7.1	
GS1000-19/10		9100	2528	45	595	1298	1800	6000	Y710-10	86	5.4	12500
		13000	3611	40		1557		10000	Y800-10	91	7.3	
		15600	4333	31		1481				89	8.7	
	A	8736	2427	41		1161	1600	6000	Y710-10	85	5.3	
		12480	3467	37		1393		10000	Y710-10	90	7.1	
		14976	4160	29		1325				88	8.5	

Type		Capacity		Head	Speed	Shaft Power	Motor			Eff.	(NPSH)r	Pump Weight
							Power	Volt	Type			
		m^3/h	L/S	m	r/min	k W	k W	V		%	m	Kg
GS1000-19/10	B	8372	2326	38	595	1034	1400	6000	Y6304-10	84	5.1	12500
		11960	3322	34		1240		10000	Y710-10	89	6.9	
		14352	3987	26		1179				87	8.2	
	C	8008	2224	35		916	1250	6000	Y6303-10	83	5.0	
		11440	3178	31		1097		10000	Y710-10	88	6.7	
		13728	3813	24		1044				86	8.0	
GS1000-19M/10		7700	2139	40	595	976	1400	6000	Y6304-10	86	4.9	12500
		11000	3056	36		1186		10000	Y710-10	91	6.6	
		13200	3667	28		1132				89	7.9	
	A	7392	2053	37		874	1250	6000	Y6303-10	85	4.8	
		10560	2933	33		1061		10000	Y710-10	90	6.4	
		12672	3520	26		1013				88	7.7	
	B	7084	1968	34		778	1120	6000	Y6302-10	84	4.6	
		10120	2811	30		944		10000	Y6304-10	89	6.2	
		12144	3373	24		901				87	7.5	
	C	6776	1882	31		689	1000	6000	Y6301-10	83	4.5	
		9680	2689	28		836		10000	Y6303-10	88	6.1	
		11616	3227	22		798				86	7.3	
GS1000-23/10		9100	2528	37	595	1079	1400	6000	Y6304-10	85	6.4	11500
		13000	3611	30		1168		10000	Y710-10	91	7.8	
		14940	4150	23		1064				88	9.1	
	A	8645	2401	33		936	1120	6000	Y6302-10	84	6.2	
		12350	3431	27		1012		10000	Y6304-10	90	7.5	
		14193	3943	21		923				87	8.8	
	B	8281	2300	31		833	1000	6000	Y6301-10	83	6.0	
		11830	3286	25		900		10000	Y6303-10	89	7.3	
		13595	3777	19		820				86	8.5	
GS1000-23M/10		7700	2139	33	595	815	1000	6000	Y6301-10	85	5.8	11500
		11000	3056	27		889		10000	Y6303-10	91	7.0	
		12640	3511	20		783				88	8.2	
	A	7392	2053	30		729	900	6000	Y5603-10	84	5.6	
		10560	2933	25		796		10000	Y6302-10	90	6.8	
		12134	3371	18		701				87	8.0	
	B	7084	1968	28		650	800	6000	Y5602-10	83	5.5	
		10120	2811	23		708		10000	Y6301-10	89	6.6	
		11629	3230	17		624				86	7.8	
GS1000-27/10		9100	2528	29	595	846	1000	6000	Y6301-10	85	5.8	10800
		13000	3611	22		856		10000	Y6303-10	91	7.2	
		15600	4333	17		821				88	8.9	
	A	8736	2427	27		757	900	6000	Y5603-10	84	5.6	
		12480	3467	20		766		10000	Y6302-10	90	7.0	
		14976	4160	16		735				87	8.7	
	B	8372	2326	25		675	800	6000	Y5602-10	83	5.5	
		11960	3322	19		682		10000	Y6301-10	89	6.8	
		14352	3987	14		654				86	8.4	
GS1000-27M/10		7700	2139	26	595	642	800	6000	Y5602-10	85	5.3	10800
		11000	3056	20		659		10000	Y6301-10	91	6.5	
		13200	3667	16		662				87	8.1	

Type		Capacity		Head	Speed	Shaft Power	Motor			Eff.	(NPSH)r	Pump Weight
							Power	Volt	Type			
		m^3/h	L/S	m	r/min	k W	k W	V		%	m	Kg
GS1000-27M/10	A	7392	2053	24	595	575	710	6000	Y5601-10	84	5.2	10800
		10560	2933	18		589		10000	Y5605-10	90	6.3	
		12672	3520	15		592				86	7.9	
	B	7084	1968	22		512	630	6000	Y5005-10	83	5.0	
		10120	2811	17		525		10000	Y5604-10	89	6.1	
		12144	3373	14		527				85	7.7	
GS1200-13/12		11900	3306	65	495	2451	3550	6000	Y1000-12	86	4.6	20800
		17000	4722	58		2920		10000	Y1000-12	92	6.8	
		20400	5667	49		3061				89	8.4	
	A	11424	3173	60		2194	3150	6000	Y900-12	85	4.5	
		16320	4533	53		2612		10000	Y1000-12	91	6.6	
		19584	5440	45		2739				88	8.2	
	B	10948	3041	55		1954	2800	6000	Y900-12	84	4.4	
		15640	4344	49		2325		10000	Y1000-12	90	6.4	
		18768	5213	41		2438				87	7.9	
	C	10472	2909	50		1731	2500	6000	Y900-12	83	4.2	
		14960	4156	45		2057		10000	Y1000-12	89	6.2	
		17952	4987	38		2158				86	7.7	
GS1200-13M/12		10500	2917	61	495	2029	2800	6000	Y900-12	86	4.3	20800
		15000	4167	54		2399		10000	Y1000-12	92	6.4	
		18000	5000	46		2535				89	7.9	
	A	10080	2800	56		1817	2500	6000	Y900-12	85	4.2	
		14400	4000	50		2146		10000	Y1000-12	91	6.2	
		17280	4800	42		2268				88	7.7	
	B	9660	2683	52		1618	2240	6000	Y800-12	84	4.1	
		13800	3833	46		1910		10000	Y900-12	90	6.1	
		16560	4600	39		2019				87	7.5	
	C	9240	2567	47		1433	2000	6000	Y800-12	83	3.9	
		13200	3667	42		1690		10000	Y900-12	89	5.9	
		15840	4400	36		1788				86	7.3	
GS1200-19/12		11900	3306	39	495	1471	2000	6000	Y800-12	86	5.3	19400
		17000	4722	35		1762		10000	Y900-12	92	7.1	
		20400	5667	27		1706				88	8.4	
	A	11424	3173	36		1316	1800	6000	Y800-12	85	5.2	
		16320	4533	32		1576		10000	Y900-12	91	6.9	
		19584	5440	25		1526				87	8.2	
	B	10948	3041	33		1172	1600	6000	Y800-12	84	5.0	
		15640	4344	30		1403		10000	Y800-12	90	6.7	
		18768	5213	23		1359				86	7.9	
	C	10472	2909	30		1038	1400	6000	Y710-12	83	4.9	
		14960	4156	27		1241		10000	Y800-12	89	6.5	
		17952	4987	21		1203				85	7.7	
GS1200-19M/12		10500	2917	36	495	1198	1600	6000	Y800-12	86	4.8	19400
		15000	4167	32		1422		10000	Y800-12	92	6.4	
		18000	5000	25		1393				88	7.8	
		9975	2771	32		1039	1400	6000	Y710-12	85	4.6	
		14250	3958	29		1232		10000	Y800-12	91	6.2	
		17100	4750	23		1208				87	7.5	

Type		Capacity		Head	Speed	Shaft Power	Motor			Eff.	(NPSH)r	Pump Weight
							Power	Volt	Type			
		m^3/h	L/S	m	r/min	k W	k W	V		%	m	Kg
GS1200-19M/12	B	9555	2654	30	495	924	1250	6000	Y710-12	84	4.5	19400
		13650	3792	26		1095		10000	Y800-12	90	6.0	
		16380	4550	21		1074				86	7.3	
	C	9240	2567	28		846	1120	6000	Y710-12	83	4.4	
		13200	3667	25		1002		10000	Y710-12	89	5.9	
		15840	4400	19		983				85	7.2	
GS1200-23/12		11900	3306	33	495	1259	1600	6000	Y800-12	85	5.5	17800
		17000	4722	27		1374		10000	Y800-12	91	6.9	
		19535	5426	21		1270				88	8.0	
	A	11424	3173	30		1127	1400	6000	Y710-12	84	5.4	
		16320	4533	25		1230		10000	Y800-12	90	6.7	
		18754	5209	19		1137				87	7.8	
	B	10948	3041	28		1004	1250	6000	Y710-12	83	5.2	
		15640	4344	23		1094		10000	Y800-12	89	6.5	
		17972	4992	18		1012				86	7.6	
GS1200-23M/12		10500	2917	30	495	1010	1250	6000	Y710-12	85	5.0	17800
		15000	4167	25		1123		10000	Y800-12	91	6.3	
		17250	4792	19		1015				88	7.4	
	A	10080	2800	28		904	1120	6000	Y710-12	84	4.9	
		14400	4000	23		1005		10000	Y710-12	90	6.1	
		16560	4600	18		908				87	7.2	
	B	9660	2683	25		805	1000	6000	Y6304-12	83	4.7	
		13800	3833	21		894		10000	Y710-12	89	6.0	
		15870	4408	16		809				86	7.0	
GS1200-27/12		11900	3306	29	495	1106	1250	6000	Y710-12	85	5.5	16700
		17000	4722	22		1120		10000	Y800-12	91	6.9	
		20400	5667	18		1150				87	8.4	
	A	11424	3173	27		990	1120	6000	Y710-12	84	5.4	
		16320	4533	20		1002		10000	Y710-12	90	6.7	
		19584	5440	17		1029				86	8.2	
	B	10948	3041	25		882	1000	6000	Y6304-12	83	5.2	
		15640	4344	19		892		10000	Y710-12	89	6.5	
		18768	5213	15		917				85	7.9	
GS1200-27M/12		10500	2917	26	495	875	1000	6000	Y6304-12	85	5.0	16700
		15000	4167	20		898		10000	Y710-12	91	6.4	
		18000	5000	16		902				87	7.7	
	A	9975	2771	23		759	900	6000	Y6303-12	84	4.8	
		14250	3958	18		779		10000	Y710-12	90	6.2	
		17100	4750	14		782				86	7.4	
	B	9555	2654	22		675	800	6000	Y6302-12	83	4.7	
		13650	3792	17		692		10000	Y6304-12	89	6.0	
		16380	4550	13		696				85	7.2	
GS1400-19/14		16100	4472	39	425	1967	2800	6000	Y900-14	87	5.4	27800
		23000	6389	35		2384		10000	Y1000-14	92	7.2	
		27600	7667	28		2366				89	8.6	
	A	15617	4338	37		1816	2500	6000	Y900-14	86	5.3	
		22310	6197	33		2200		10000	Y1000-14	91	7.1	
		26772	7437	26		2184				88	8.4	

Type		Capacity		Head	Speed	Shaft Power	Motor			Eff.	(NPSH)r	Pump Weight
							Power	Volt	Type			
		m^3/h	L/S	m	r/min	k W	k W	V		%	m	Kg
GS1400–19/14	B	14973	4159	34	425	1619	2240	6000	Y900–14	85	5.1	27800
		21390	5942	30		1961		10000	Y900–14	90	6.9	
		25668	7130	24		1947				87	8.2	
	C	14490	4025	32		1485	2000	6000	Y900–14	84	5.0	
		20700	5750	28		1797		10000	Y900–14	89	6.7	
		24840	6900	23		1785				86	8.0	
GS1400–19M/14		14000	3889	36	425	1579	2240	6000	Y900–14	87	4.9	27800
		20000	5556	32		1896		10000	Y900–14	92	6.6	
		24000	6667	25		1837				89	7.9	
	A	13580	3772	34		1458	2000	6000	Y900–14	86	4.8	
		19400	5389	30		1749		10000	Y900–14	91	6.5	
		23280	6467	24		1696				88	7.7	
	B	13020	3617	31		1300	1800	6000	Y800–14	85	4.7	
		18600	5167	28		1559		10000	Y900–14	90	6.3	
		22320	6200	22		1512				87	7.5	
	C	12460	3461	29		1153	1600	6000	Y800–14	84	4.5	
		17800	4944	25		1381		10000	Y800–14	89	6.1	
		21360	5933	20		1340				86	7.3	
GS1400–23/14		16100	4472	32	425	1632	2240	6000	Y900–14	86	5.9	25600
		23000	6389	27		1839		10000	Y900–14	92	7.3	
		26450	7347	21		1720				88	8.5	
	A	15456	4293	29		1461	2000	6000	Y900–14	85	5.7	
		22080	6133	25		1645		10000	Y900–14	91	7.1	
		25392	7053	19		1539				87	8.3	
	B	14812	4114	27		1301	1800	6000	Y800–14	84	5.6	
		21160	5878	23		1464		10000	Y900–14	90	6.9	
		24334	6759	18		1370				86	8.0	
GS1400–23M/14		14000	3889	29	425	1286	1800	6000	Y800–14	86	5.5	25600
		20000	5556	25		1481		10000	Y900–14	92	6.8	
		23000	6389	19		1353				88	7.9	
	A	13440	3733	27		1152	1600	6000	Y800–14	85	5.4	
		19200	5333	23		1325		10000	Y800–14	91	6.6	
		22080	6133	18		1211				87	7.7	
	B	12880	3578	25		1026	1400	6000	Y800–14	84	5.2	
		18400	5111	21		1179		10000	Y800–14	90	6.4	
		21160	5878	16		1078				86	7.5	
GS1400–27/14		16100	4472	29	425	1497	1800	6000	Y800–14	85	6.0	2600
		23000	6389	22		1515		10000	Y900–14	91	7.4	
		26450	7347	18		1458				89	8.8	
	A	15456	4293	27		1340	1600	6000	Y800–14	84	5.8	
		22080	6133	20		1355		10000	Y800–14	90	7.2	
		25392	7053	17		1304				88	8.6	
	B	14812	4114	25		1194	1400	6000	Y800–14	83	5.7	
		21160	5878	19		1206		10000	Y800–14	89	7.0	
		24334	6759	15		1161				87	8.3	
GS1400–27M/14		14000	3889	26	425	1167	1400	6000	Y800–14	85	5.5	2600
		20000	5556	20		1198		10000	Y800–14	91	6.9	
		24000	6667	17		1249				89	8.2	

Type		Capacity		Head	Speed	Shaft Power	Motor			Eff.	(NPSH)r	Pump Weight
							Power	Volt	Type			
		m^3/h	L/S	m	r/min	k W	k W	V		%	m	Kg
GS1400–27M/14	A	13440	3733	24	425	1045	1250	6000	Y800–14	84	5.4	26000
		19200	5333	18		1072		10000	Y800–14	90	6.7	
		23040	6400	16		1118				88	8.0	
	B	12880	3578	22		931	1120	6000	Y710–14	83	5.2	
		18400	5111	17		954		10000	Y800–14	89	6.5	
		22080	6133	14		995				87	7.8	
GS1600–19/16		21000	5833	39	370	2565	3550	6000	Y1000–16	87	5.4	35500
		30000	8333	35		3077		10000	Y1000–16	93	7.2	
		36000	10000	27		2943				90	8.7	
	A	20160	5600	36		2296	3150	6000	Y1000–16	86	5.3	
		28800	8000	32		2752		10000	Y1000–16	92	7.0	
		34560	9600	25		2633				89	8.5	
	B	19320	5367	33		2045	2800	6000	Y1000–16	85	5.1	
		27600	7667	30		2448		10000	Y1000–16	91	6.8	
		33120	9200	23		2344				88	8.2	
	C	18480	5133	30		1811	2500	6000	Y1000–16	84	5.0	
		26400	7333	27		2167		10000	Y1000–16	90	6.6	
		31680	8800	21		2075				87	8.0	
GS1600–19M/16		18200	5056	36	370	2052	2800	6000	Y1000–16	87	5.0	35500
		26000	7222	32		2438		10000	Y1000–16	93	6.7	
		31200	8667	25		2362				90	8.0	
	A	17472	4853	33		1837	2500	6000	Y1000–16	86	4.9	
		24960	6933	29		2180		10000	Y1000–16	92	6.5	
		29952	8320	23		2113				89	7.8	
	B	16744	4651	30		1636	2240	6000	Y1000–16	85	4.7	
		23920	6644	27		1940		10000	Y1000–16	91	6.3	
		28704	7973	21		1881				88	7.6	
	C	16016	4449	28		1448	2000	6000	Y900–16	84	4.6	
		22880	6356	25		1717		10000	Y1000–16	90	6.2	
		27456	7627	19		1665				87	7.3	
GS1600–23/16		21000	5833	32	370	2129	2800	6000	Y1000–16	86	6.2	33800
		30000	8333	27		2373		10000	Y1000–16	93	7.6	
		34500	9583	21		2243				88	8.7	
	A	20160	5600	29		1906	2500	6000	Y1000–16	85	6.0	
		28800	8000	25		2123		10000	Y1000–16	92	7.4	
		33120	9200	19		2008				87	8.5	
	B	19320	5367	27		1698	2240	6000	Y1000–16	84	5.9	
		27600	7667	23		1889		10000	Y1000–16	91	7.2	
		31740	8817	18		1788				86	8.2	
GS1600–23M/16		18200	5056	29	370	1672	2240	6000	Y1000–16	86	5.7	33800
		26000	7222	25		1905		10000	Y1000–16	93	7.0	
		29900	8306	19		1759				88	8.0	
	A	17472	4853	27		1497	2000	6000	Y900–16	85	5.5	
		24960	6933	23		1703		10000	Y1000–16	92	6.8	
		28704	7973	18		1574				87	7.8	
	B	16744	4651	25		1333	1800	6000	Y900–16	84	5.4	
		23920	6644	21		1516		10000	Y900–16	91	6.6	
		27508	7641	16		1402				86	7.6	

Type		Capacity		Head	Speed	Shaft Power	Motor			Eff.	(NPSH)r	Pump Weight
							Power	Volt	Type			
		m^3/h	L/S	m	r/min	k W	k W	V		%	m	Kg
GS1600-27/16		21000	5833	28	370	1885	2240	6000	Y1000-16	85	6.2	33800
		30000	8333	22		1955		10000	Y1000-16	92	7.6	
		36000	10000	18		1984				89	9.0	
	A	20160	5600	26		1688	2000	6000	Y900-16	84	6.0	
		28800	8000	20		1749		10000	Y1000-16	91	7.4	
		34560	9600	17		1775				88	8.8	
	B	19320	5367	24		1503	1800	6000	Y900-16	83	5.9	
		27600	7667	19		1556		10000	Y900-16	90	7.2	
		33120	9200	15		1580				87	8.5	
GS1600-27M/16		18200	5056	26	370	1517	1800	6000	Y900-16	85	5.6	33800
		26000	7222	20		1540		10000	Y900-16	92	7.0	
		32707	9085	16		1602				89	8.3	
	A	17472	4853	24		1358	1600	6000	Y900-16	84	5.4	
		24960	6933	18		1378		10000	Y900-16	91	6.8	
		31399	8722	15		1434				88	8.1	
	B	16744	4651	22		1210	1400	6000	Y800-16	83	5.3	
		23920	6644	17		1226		10000	Y900-16	90	6.6	
		30090	8358	14		1276				87	7.9	
GS1800-19/16		26600	7389	45	370	3749	5000	6000	Y1120-16	87	6.4	44500
		38000	10556	40		4454		10000	Y1120-16	93	8.4	
		45600	12667	31		4328				89	10.1	
	A	25536	7093	41		3356	4500	6000	Y1120-16	86	6.2	
		36480	10133	37		3983		10000	Y1120-16	92	8.2	
		43776	12160	29		3873				88	9.8	
	B	24472	6798	38		2988	4000	6000	Y1000-16	85	6.1	
		34960	9711	34		3544		10000	Y1120-16	91	7.9	
		41952	11653	26		3448				87	9.6	
	C	23408	6502	35		2646	3550	6000	Y1000-16	84	5.9	
		33440	9289	31		3136		10000	Y1000-16	90	7.7	
		40128	11147	24		3052				86	9.3	
GS1800-19M/16		23800	6611	43	370	3205	4500	6000	Y1120-16	87	6.1	44500
		34000	9444	38		3786		10000	Y1120-16	93	8.0	
		40800	11333	30		3748				89	9.6	
	A	22848	6347	40		2869	4000	6000	Y1000-16	86	5.9	
		32640	9067	35		3386		10000	Y1120-16	92	7.8	
		39168	10880	28		3353				88	9.3	
	B	21896	6082	36		2555	3550	6000	Y1000-16	85	5.8	
		31280	8689	32		3013		10000	Y1000-16	91	7.6	
		37536	10427	25		2985				87	9.1	
	C	20944	5818	33		2262	3150	6000	Y1000-16	84	5.6	
		29920	8311	29		2666		10000	Y1000-16	90	7.3	
		35904	9973	23		2643				86	8.8	
GS1800-23/16		26600	7389	37	370	3119	4000	6000	Y1000-16	86	7.0	42500
		38000	10556	32		3563		10000	Y1120-16	93	8.5	
		43700	12139	24		3248				88	9.9	
	A	25536	7093	34		2792	3550	6000	Y1000-16	85	6.8	
		36480	10133	29		3187		10000	Y1000-16	92	8.3	
		41952	11653	22		2906				87	9.6	

Type		Capacity		Head	Speed	Shaft Power	Motor			Eff.	(NPSH)r	Pump Weight
							Power	Volt	Type			
		m^3/h	L/S	m	r/min	k W	k W	V		%	m	Kg
GS1800-23/16	B	24472	6798	31	370	2486	3150	6000	Y1000-16	84	6.6	42500
		34960	9711	27		2835		10000	Y1000-16	91	8.0	
		40204	11168	20		2588				86	9.4	
GS1800-23/16		23800	6611	36	370	2715	3550	6000	Y1000-16	86	6.5	42500
		34000	9444	30		2989		10000	Y1000-16	93	8.0	
		39100	10861	24		2906				88	9.2	
	A	22848	6347	33		2430	3150	6000	Y1000-16	85	6.3	
		32640	9067	28		2673		10000	Y1000-16	92	7.8	
		37536	10427	22		2600				87	9.0	
	B	21896	6082	30		2164	2800	6000	Y1000-16	84	6.1	
		31280	8689	25		2378		10000	Y1000-16	91	7.6	
		35972	9992	20		2315				86	8.7	
GS1800-27/16		26600	7389	34	370	2866	3550	6000	Y1000-16	86	6.7	41000
		38000	10556	26		2895		10000	Y1000-16	93	8.4	
		45600	12667	22		3072				89	10.0	
	A	25536	7093	31		2565	3150	6000	Y1000-16	85	6.5	
		36480	10133	24		2589		10000	Y1000-16	92	8.2	
		43776	12160	20		2748				88	9.7	
	B	24472	6798	29		2285	2800	6000	Y1000-16	84	6.3	
		34960	9711	22		2304		10000	Y1000-16	91	7.9	
		41952	11653	19		2447				87	9.5	
GS1800-27M/16		23800	6611	30	370	2289	2800	6000	Y1000-16	85	6.2	41000
		34000	9444	23		2291		10000	Y1000-16	93	7.8	
		40800	11333	18		2249				89	9.3	
	A	22848	6347	28		2049	2500	6000	Y1000-16	84	6.0	
		32640	9067	21		2049		10000	Y1000-16	92	7.6	
		39168	10880	17		2012				88	9.1	
	B	21896	6082	25		1825	2240	6000	Y1000-16	83	5.9	
		31280	8689	19		1823		10000	Y1000-16	91	7.4	
		37536	10427	15		1791				87	8.8	

Technical Data

GS150-4(M)/2 GS150-6(M)/2

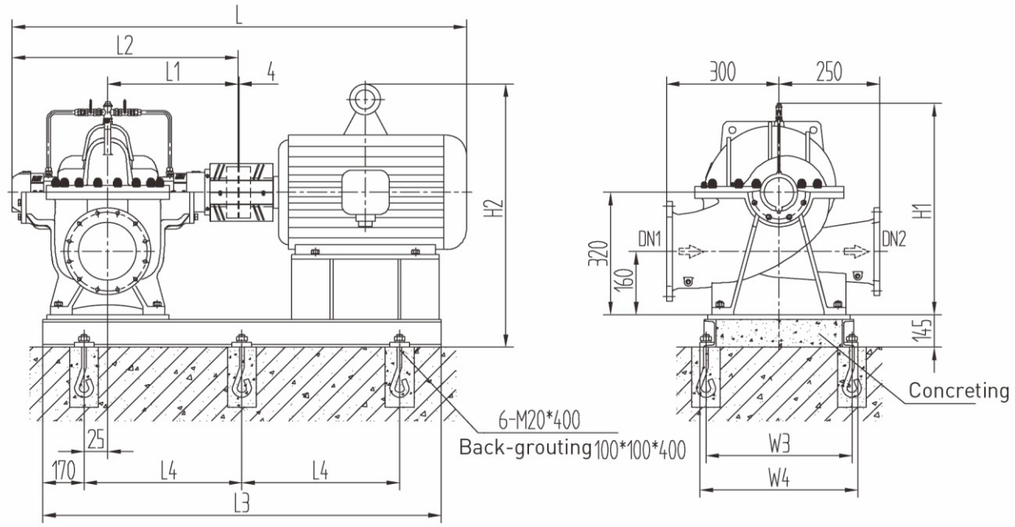

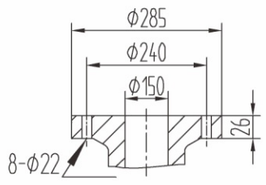

Inlet Flange(PN1.6MPa)

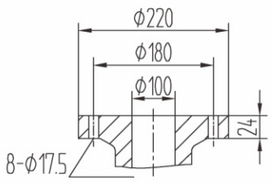

Outlet Flange(PN1.6MPa)

Installation Dimensions Table of Pump

Pump Type	Motor			Installation Dimensions(mm)								
	Type	Power kW	Volt. V	L	L1	L2	L3	L4	W3	W4	H1	H2
GS150-4(M)/2	Y315S-2	110	380	2106	500	860	1590	625	650	720	620	790
	Y280M-2	90	380	1896	500	860	1560	610	570	640	620	825
	Y280S-2	75	380	1846	500	860	1510	585	570	640	620	825
	Y250M-2	55	380	1776	500	860	1440	550	500	570	620	790
	Y225M-2	45	380	1661	500	860	1340	500	450	520	620	770
GS150-6(M)/2	Y250M-2	55	380	1736	455	800	1390	515	510	580	600	790
	Y225M-2	45	380	1651	455	800	1300	490	455	525	600	770
	Y200L2-2	37	380	1581	455	800	1270	460	415	485	600	740
	Y200L1-2	30	380	1581	455	800	1270	460	415	485	600	740
	Y180M-2	22	380	1476	455	800	1190	420	375	445	600	715

GS150-9(M)/2 GS150-13(M)/2 GS150-19(M)/2

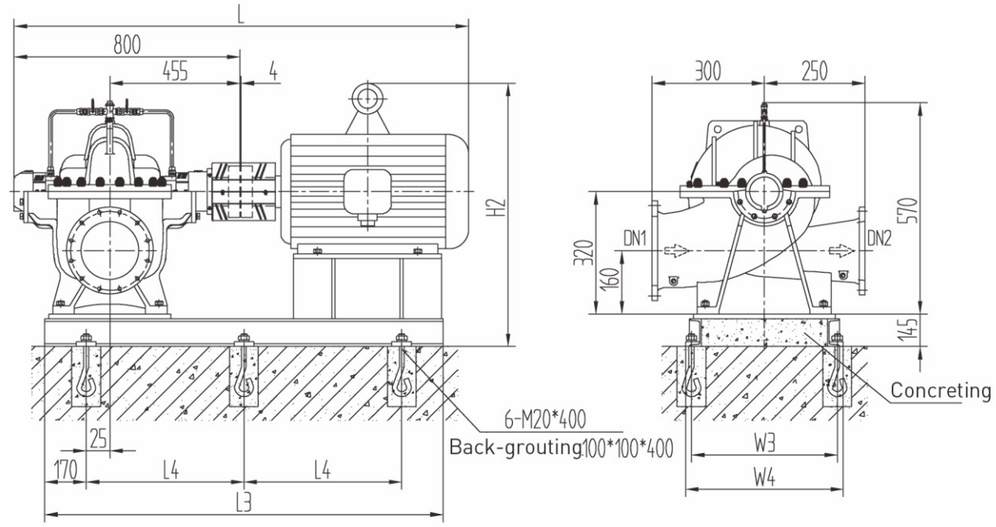

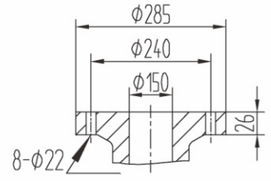

Inlet Flange(PN1.6MPa)

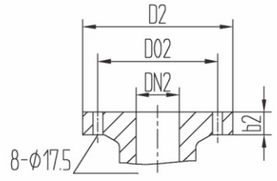

Outlet Flange(PN1.6MPa)

Installation Dimensions Table of Pump

Pump Type	Motor			Installation Dimensions(mm)									
	Type	Power kW	Volt. V	L	L3	L4	W3	W4	H2	DN2	D02	D2	b2
GS150-9(M)/2	Y200L2-2	37	380	1581	1270	460	415	485	740	100	180	220	24
	Y200L1-2	30	380	1581	1270	460	415	485	740	100	180	220	24
	Y180M-2	22	380	1476	1190	420	375	445	715	100	180	220	24
	Y160L-2	18.5	380	1456	1180	420	350	420	690	100	180	220	24
	Y160M2-2	15	380	1411	1140	395	350	420	690	100	180	220	24
GS150-13(M)/2	Y160L-2	18.5	380	1456	1180	420	350	420	690	125	210	250	26
	Y160M2-2	15	380	1411	1140	395	350	420	690	125	210	250	26
	Y160M1-2	11	380	1411	1140	395	350	420	690	125	210	250	26
GS150-19(M)/2	Y160M1-2	11	380	1369	1140	400	350	420	670	125	210	250	26
	Y132S2-2	7.5	380	1239	1000	330	350	420	628	125	210	250	26
	Y132S1-2	5.5	380	1239	1000	330	350	420	628	125	210	250	26

GS200-4(M)/2 GS200-6(M)/2

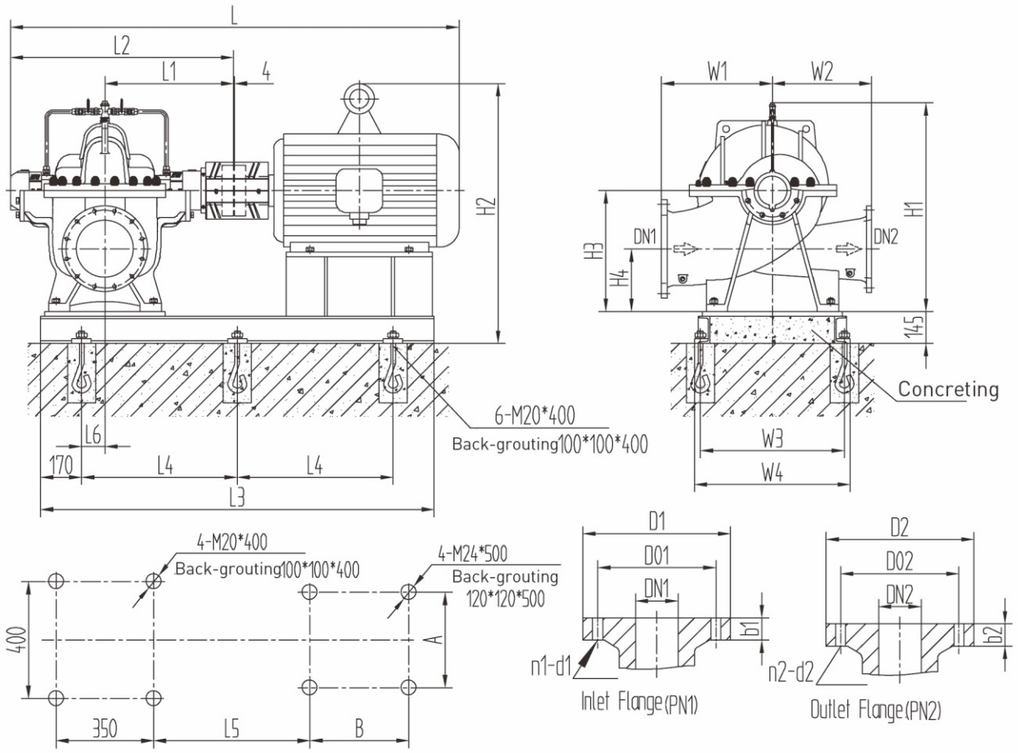

GS200-9(M)/2 GS200-13(M)/2 GS200-19(M)/2

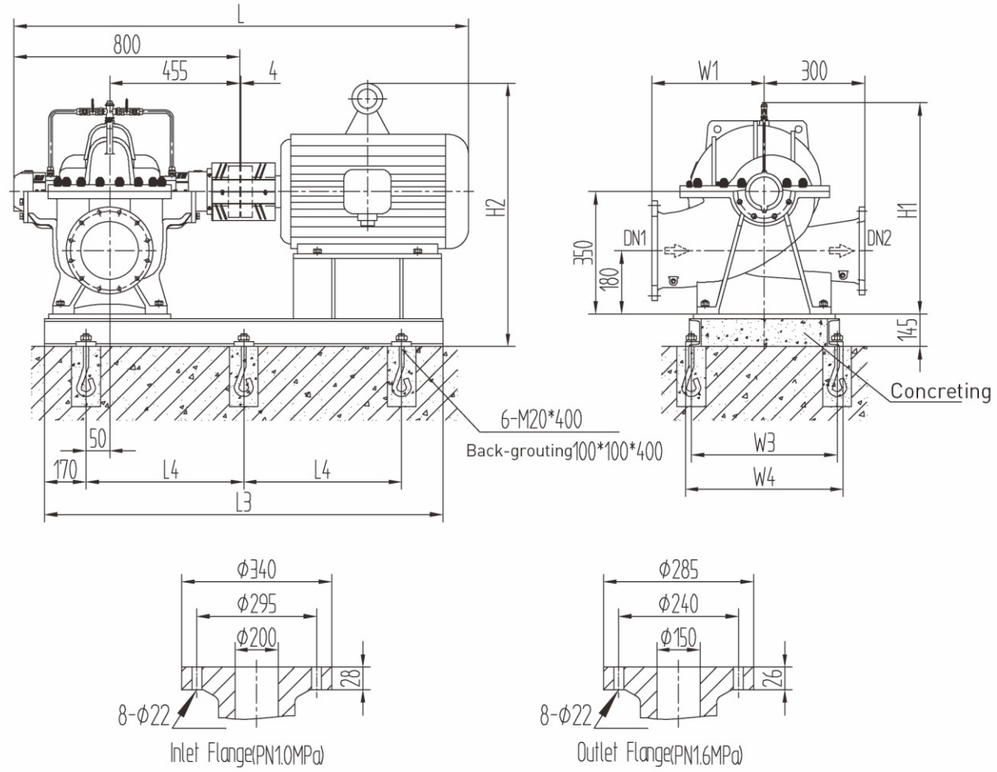

Dimensions Table of Pump

Pump Type	DN1	PN1	D01	D1	n1-d1	b1	DN2	PN2	D02	D2	n2-d2	b2	L1	L2	H1	W1	W2
GS200-4(M)/2	200	1.6 MPa	295	340	12-Φ22	30	125	2.5MPa	220	270	8-Φ26	30	505	870	750	400	350
GS200-6(M)/2	200	1.0 MPa	295	340	8-Φ22	28	125	1.6MPa	210	250	8-Φ17.5	26	515	890	640	330	300

Installation Dimensions Table of Pump

Pump Type	Motor			Installation Dimensions(mm)											
	Type	Power kW	Volt. V	L	L3	L4	L5	L6	W3	W4	A	B	H2	H3	H4
GS200-4(M)/2	Y355M2-2	250	380	2416	/	/	730	/	/	/	610	560	1035	400	200
	Y3552-2		6000	2746	/	/	821	/	/	/	630	900	1070	400	200
	Y315L2-2	200	380	2186	1770	715	/	75	660	730	/	/	1095	400	200
	Y315L1-2	160	380	2186	1770	715	/	75	660	730	/	/	1095	400	200
	Y315M-2	132	380	2186	1710	685	/	75	660	730	/	/	1095	400	200
	Y315S-2	110	380	2116	1650	655	/	75	660	730	/	/	1095	400	200
GS200-6(M)/2	Y315M-2	132	380	2206	1690	660	/	50	660	730	/	/	1045	350	150
	Y315S-2	110	380	2136	1630	650	/	50	660	730	/	/	1045	350	150
	Y280M-2	90	380	1946	1600	620	/	50	580	650	/	/	855	350	150
	Y280S-2	75	380	1896	1550	595	/	50	580	650	/	/	855	350	150

Installation Dimensions Table of Pump

Pump Type	Motor			Installation Dimensions(mm)							
	Type	Power kW	Volt. V	L	L3	L4	W1	W3	W4	H1	H2
GS200-9(M)/2	Y280M-2	90	380	1856	1540	600	330	580	650	640	855
	Y280S-2	75	380	1806	1490	575	330	580	650	640	855
	Y250M-2	55	380	1736	1420	540	330	520	590	640	820
	Y225M-2	45	380	1621	1320	490	330	470	540	640	800
	Y200L2-2	37	380	1581	1290	475	330	430	500	640	770
GS200-13(M)/2	Y225M-2	45	380	1621	1320	490	300	470	540	625	800
	Y200L2-2	37	380	1581	1290	475	300	430	500	625	770
	Y200L1-2	30	380	1581	1290	475	300	430	500	625	770
	Y180M-2	22	380	1476	1220	435	300	390	460	625	745
GS200-19(M)/2	Y200L1-2	30	380	1581	1290	475	300	430	500	620	770
	Y180M-2	22	380	1476	1220	435	300	390	460	620	745
	Y160L-2	18.5	380	1456	1210	435	300	410	480	620	720
	Y160M2-2	15	380	1411	1160	410	300	410	480	620	720

GS250-4(M)/4 GS250-6(M)/4

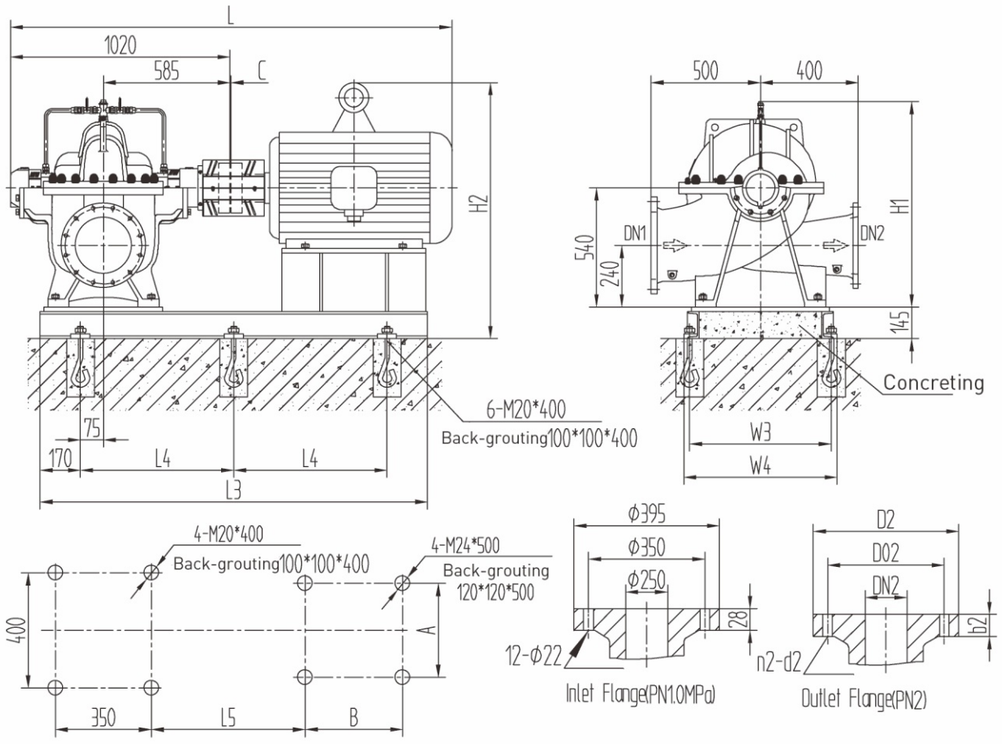

Dimensions Table of Pump							
Pump Type	DN2	N2	D02	D2	n2-d2	b2	H1
GS250-4(M)/4	200	1.6 MPa	295	340	12-ϕ22	30	1000
GS250-6(M)/4	150	1.0 MPa	240	285	8-ϕ22	26	930

Installation Dimensions Table of Pump														
Pump Type	Motor			Installation Dimensions(mm)										
	Type	Power	Volt.	L	L3	L4	L5	W3	W4	A	B	H2	C
		kW	V											
GS250-4(M)/4	Y355M1-4	220	380	2588	/	/	836	/	/	610	560	1035	5
	Y3553-4		6000	2818	/	/	937	/	/	630	900	1070	5
	Y315L2-4	200	380	2358	1860	760	/	650	720	/	/	1255	5
	Y315L1-4	160	380	2358	1860	760	/	650	720	/	/	1255	4
	Y315M-4	132	380	2358	1810	735	/	650	720	/	/	1255	4
	Y315S-4	110	380	2288	1760	710	/	650	720	/	/	1255	4
GS250-6(M)/4	Y315M-4	132	380	2366	1820	735	/	660	730	/	/	1255	4
	Y315S-4	110	380	2296	1760	710	/	660	730	/	/	1255	4
	Y280M-4	90	380	2076	1700	680	/	580	650	/	/	1065	4
	Y280S-4	75	380	2026	1640	655	/	580	650	/	/	1065	4
	Y250M-4	55	380	1956	1570	620	/	520	590	/	/	1030	4

GS250-9(M)/4 GS250-13(M)/4 GS250-19(M)/4

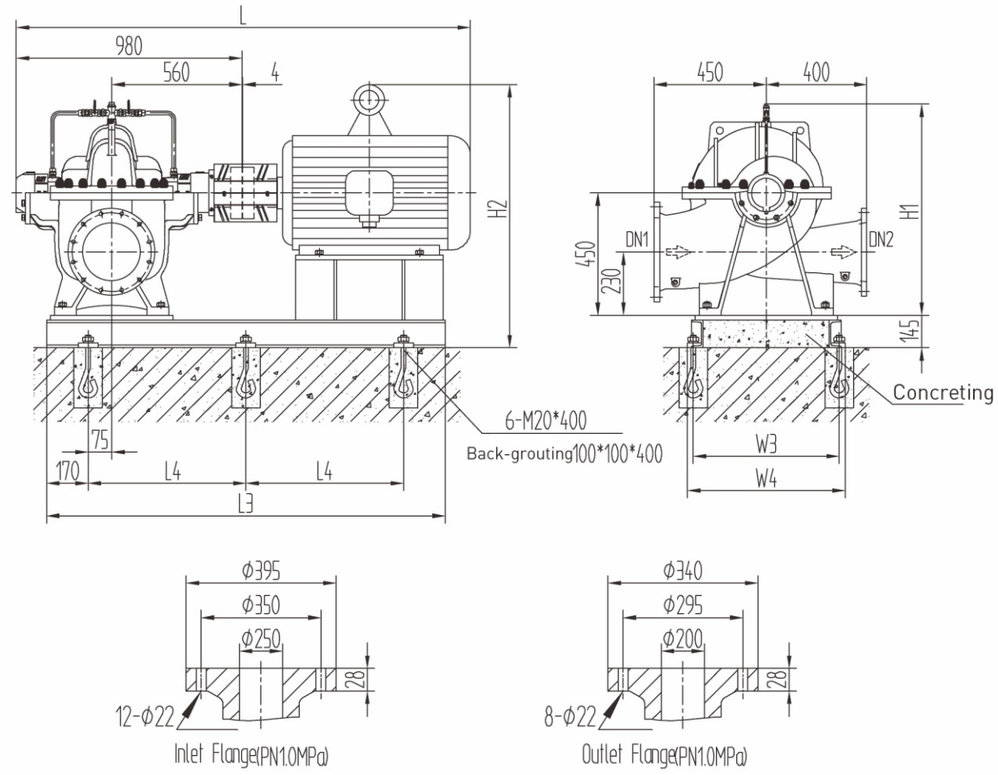

Installation Dimensions Table of Pump										
Pump Type	Motor			Installation Dimensions(mm)						
	Type	Power	Volt.	L	L3	L4	W3	W4	H1	H2
		kW	V							
GS250-9(M)/4	Y280S-4	75	380	1986	1620	640	580	650	820	955
	Y250M-4	55	380	1916	1550	605	520	590	820	920
	Y225M-4	45	380	1831	1480	570	510	580	820	900
	Y225S-4	37	380	1806	1460	555	510	580	820	900
GS250-13(M)/4	Y225M-4	45	380	1831	1480	570	510	580	800	900
	Y225S-4	37	380	1806	1460	555	510	580	800	900
	Y200L-4	30	380	1761	1420	540	510	580	800	870
	Y180L-4	22	380	1696	1380	520	510	580	800	845
GS250-19(M)/4	Y200L-4	30	380	1756	1420	540	510	580	830	870
	Y180L-4	22	380	1696	1380	520	510	580	830	845
	Y180M-4	18.5	380	1656	1340	500	510	580	830	845
	Y160L-4	15	380	1634	1340	500	510	580	830	820

GS300-4(M)/4 GS300-6(M)/4

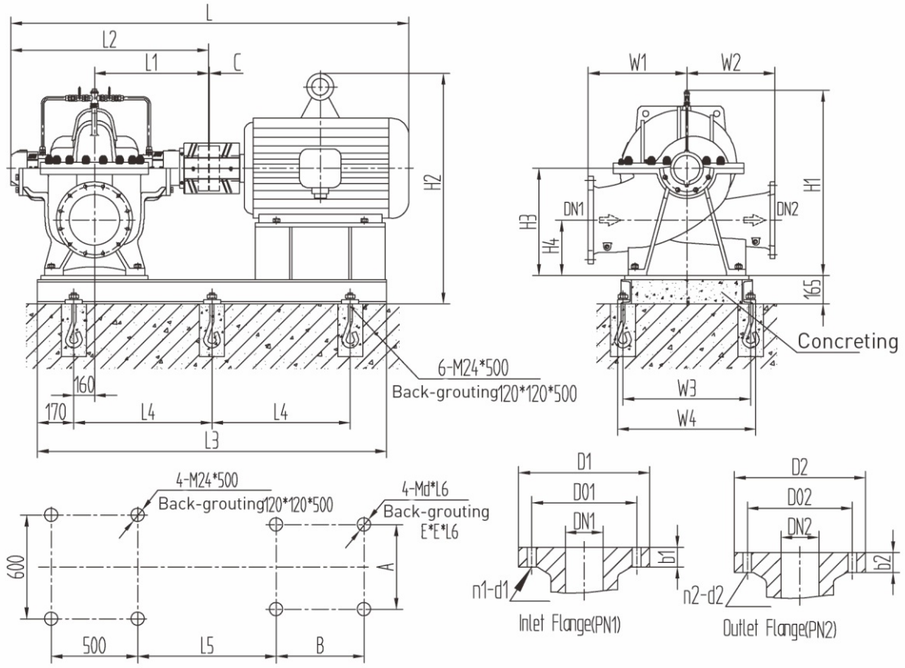

Dimensions Table of Pump

Pump Type	DN1	PN1	D01	D1	n1-d1	b1	DN2	PN2	D02	D2	n2-d2	b2	L1	L2	H1	W1	W2
GS300-4(M)/4	300	1.6 MPa	410	460	12-Φ26	34	200	2.5MPa	310	360	12-Φ26	36	690	1205	1170	600	550
GS300-6(M)/4	300	1.0 MPa	400	445	12-Φ22	28	200	1.6MPa	295	340	12-Φ22	30	670	1165	1000	550	500

Installation Dimensions Table of Pump

Pump Type	Motor			Installation Dimensions(mm)													
	Type	Power kW	Volt. V	L	L3	L4	L5	W3	W4	A	B	C	H2	H3	H4	E	Md×L6
GS300-4(M)/4	Y4004-4	500	6000	3113	/	/	993	/	/	710	1000	6	1200	630	280	150	M30×630
	Y4504-4		10000	3363	/	/	1013	/	/	800	1120	6	1350	630	280	150	M30×630
	Y4003-4	450	6000	3113	/	/	993	/	/	710	1000	6	1200	630	280	150	M30×630
	Y4503-4		10000	3363	/	/	1013	/	/	800	1120	6	1350	630	280	150	M30×630
	Y4002-4	400	6000	3113	/	/	993	/	/	710	1000	6	1200	630	280	150	M30×630
	Y4502-4		10000	3363	/	/	1013	/	/	800	1120	6	1350	630	280	150	M30×630
	Y4001-4	355	6000	3113	/	/	993	/	/	710	1000	6	1200	630	280	150	M30×630
	Y4501-4		10000	3363	/	/	1013	/	/	800	1120	6	1350	630	280	150	M30×630
	Y355L2-4	315	380	2783	/	/	872	/	/	610	630	6	1035	630	280	120	M24×500
	Y3556-4		6000	3013	/	/	973	/	/	630	900	6	1070	630	280	120	M24×500
	Y355L1-4	280	380	2782	/	/	871	/	/	610	630	5	1035	630	280	120	M24×500
	Y3555-4		6000	3012	/	/	972	/	/	630	900	5	1070	630	280	120	M24×500
	Y355M2-4	250	380	2782	/	/	871	/	/	610	560	5	1035	630	280	120	M24×500
	Y3554-4		6000	3012	/	/	972	/	/	630	900	5	1070	630	280	120	M24×500
GS300-6(M)/4	Y355L2-4	315	380	2742	/	/	851	/	/	610	630	5	1035	550	250	120	M24×500
	Y3556-4		6000	2972	/	/	952	/	/	630	900	5	1070	550	250	120	M24×500
	Y355L1-4	280	380	2742	/	/	851	/	/	610	630	5	1035	550	250	120	M24×500
	Y3555-4		6000	2972	/	/	952	/	/	630	900	5	1070	550	250	120	M24×500
	Y355M2-4	250	380	2742	/	/	851	/	/	610	560	5	1035	550	250	120	M24×500
	Y3554-4		6000	2972	/	/	952	/	/	630	900	5	1070	550	250	120	M24×500
	Y355M1-4	220	380	2742	/	/	851	/	/	610	560	5	1035	550	250	120	M24×500
	Y3553-4		6000	2972	/	/	952	/	/	630	900	5	1070	550	250	120	M24×500
	Y315L2-4	200	380	2512	2050	850	/	740	810	/	/	5	1335	550	250	120	M24×500
	Y315L1-4	160	380	2512	2050	850	/	740	810	/	/	5	1335	550	250	120	M24×500
	Y315M-4	132	380	2512	1990	815	/	740	810	/	/	5	1335	550	250	120	M24×500

GS300-9(M)/4 GS300-13(M)/4 GS300-19(M)/4 、GS300-27(M)/4

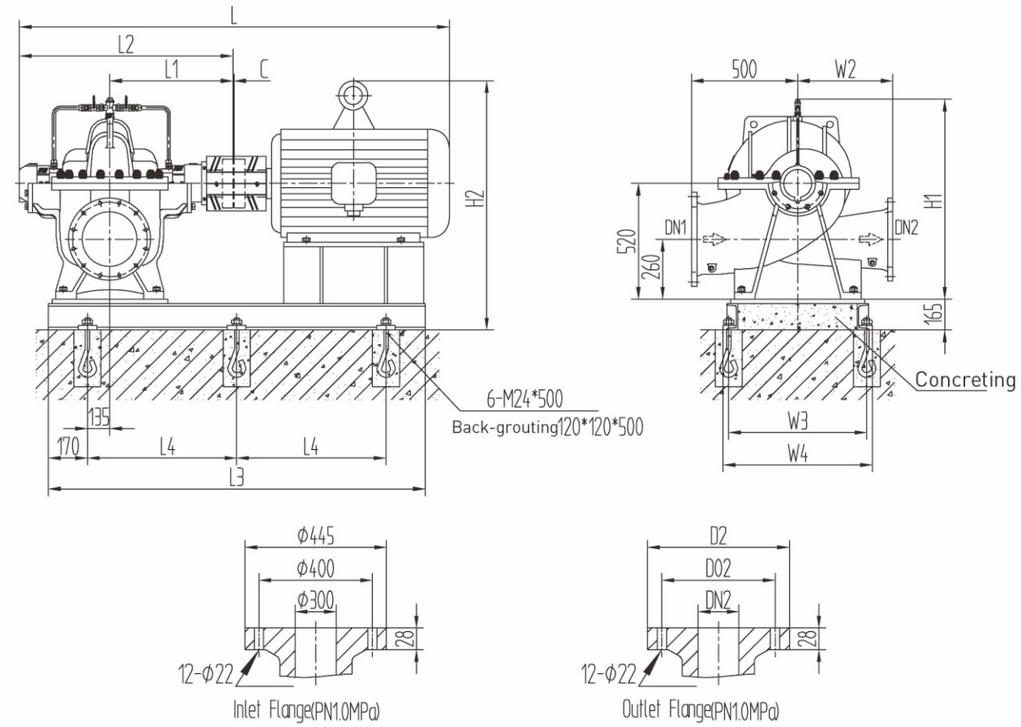

Installation Dimensions Table of Pump

Pump Type	Motor			(mm) Installation Dimensions													
	Type	Power kW	Volt. V	L	L1	L2	L3	L4	W2	W3	W4	H1	H2	C	DN2	D02	D2
GS300-9(M)/4	Y315L2-4	200	380	2367	585	1020	1950	785	500	660	730	950	1235	5	250	350	395
	Y315L1-4	160	380	2367	585	1020	1950	785	500	660	730	950	1235	5	250	350	395
	Y315M-4	132	380	2366	585	1020	1880	760	500	660	730	950	1235	4	250	350	395
	Y315S-4	110	380	2296	585	1020	1820	735	500	660	730	950	1235	4	250	350	395
	Y280M-4	90	380	2076	585	1020	1760	705	500	580	650	950	1045	4	250	350	395
GS300-13(M)/4	Y280M-4	90	380	2036	560	980	1730	690	400	580	650	900	1045	4	250	350	395
	Y280S-4	75	380	1986	560	980	1680	665	400	580	650	900	1045	4	250	350	395
	Y250M-4	55	380	1916	560	980	1610	630	400	580	650	900	1010	4	250	350	395
GS300-19(M)/4	Y250M-4	55	380	1916	560	980	1610	630	400	580	650	890	1010	4	250	350	395
	Y225M-4	45	380	1831	560	980	1540	595	400	580	650	890	990	4	250	350	395
	Y225S-4	37	380	1806	560	980	1520	580	400	580	650	890	990	4	250	350	395
	Y200L-4	30	380	1756	560	980	1480	565	400	580	650	890	960	4	250	350	395
GS300-27(M)/4	Y225S-4	37	380	1886	600	1060	1560	605	400	580	650	895	990	4	300	400	445
	Y200L-4	30	380	1841	600	1060	1520	590	400	580	650	895	960	4	300	400	445
	Y180L-4	22	380	1776	600	1060	1490	565	400	580	650	895	935	4	300	400	445

GS350-4(M)/4

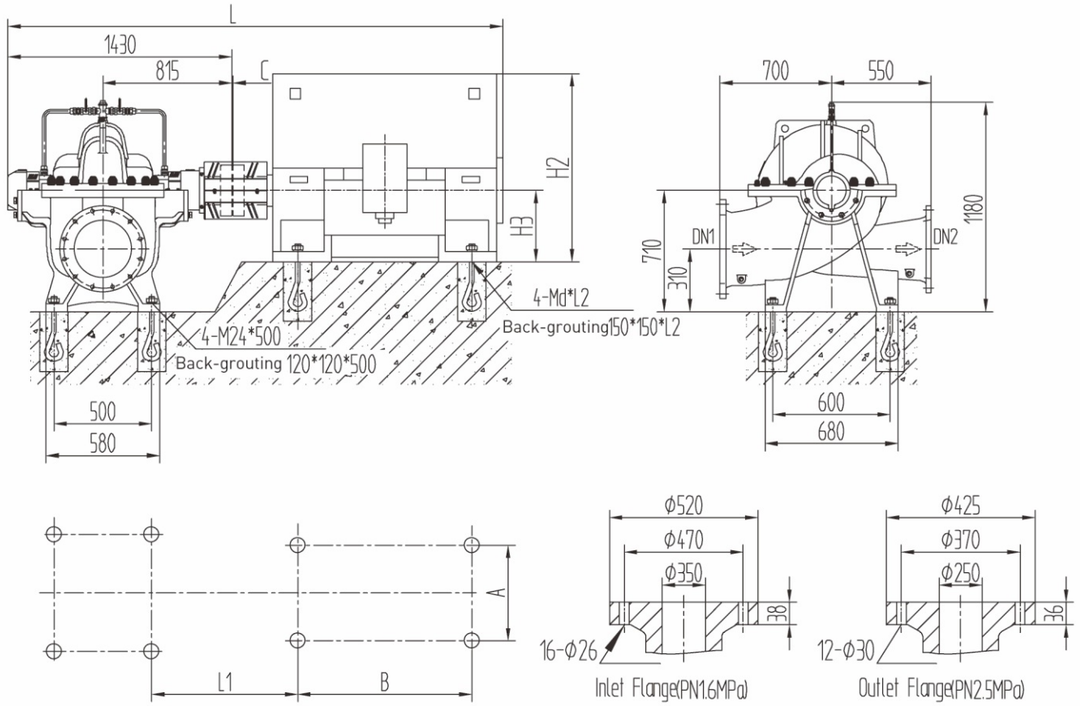

GS350-6(M)/4

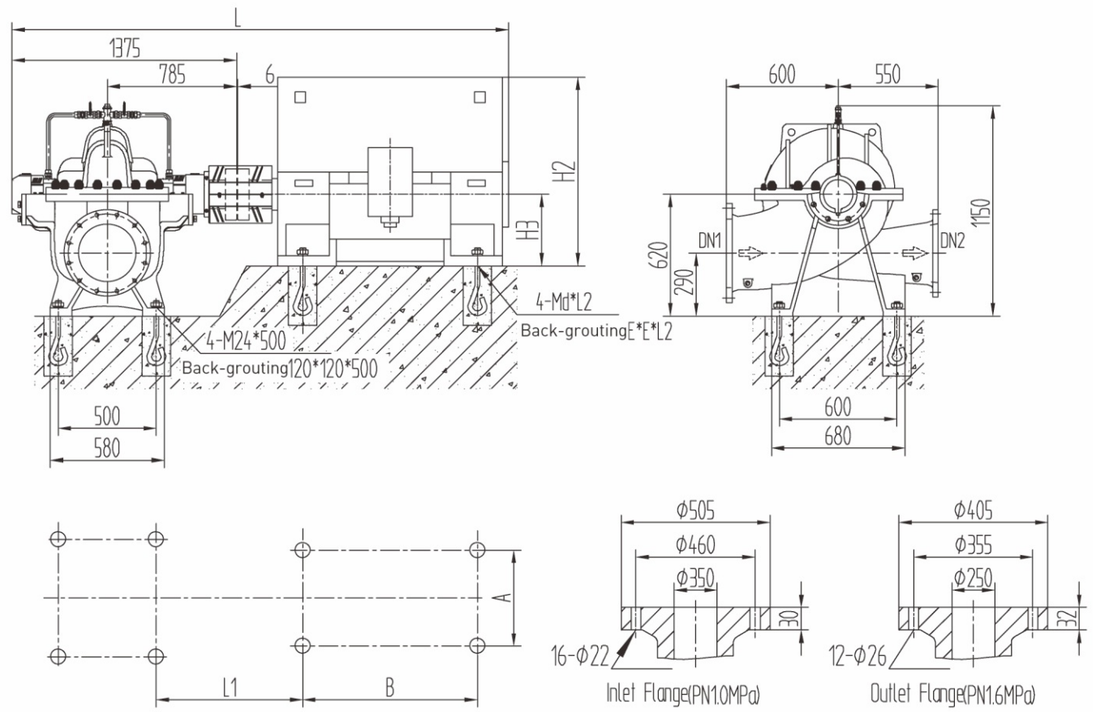

Installation Dimensions Table of Pump

Pump Type	Motor			Installation Dimensions(mm)							
	Type	Power kW	Volt. V	L	L1	A	B	H2	H3	C	Md×L2
GS350-4(M)/4	Y5002-4	1120	6000	3859	1299	900	1250	1520	500	7	M36×800
	Y5005-4		10000	3859	1259	900	1250	1820	500	7	M36×800
	Y4504-4	900	6000	3589	1139	800	1120	1350	450	7	M30×630
	Y5003-4		10000	3859	1259	900	1250	1820	500	7	M36×800
	Y4503-4	800	6000	3589	1139	800	1120	1350	450	7	M30×630
	Y5002-4		10000	3859	1259	900	1250	1820	500	7	M36×800
	Y4502-4	710	6000	3589	1139	800	1120	1350	450	7	M30×630
	Y5001-4		10000	3859	1259	900	1250	1820	500	7	M36×800
	Y4501-4	630	6000	3589	1139	800	1120	1350	450	7	M30×630
	Y4506-4		10000	3589	1139	800	1120	1350	450	7	M30×630
	Y4005-4	560	6000	3338	1118	710	1000	1200	400	6	M30×630
	Y4505-4		10000	3588	1138	800	1120	1350	450	6	M30×630

Installation Dimensions Table of Pump

Pump Type	Motor			Installation Dimensions(mm)							
	Type	Power kW	Volt. V	L	L1	A	B	H2	H3	E	Md×L2
GS350-6(M)/4	Y4501-4	630	6000	3533	1108	800	1120	1350	450	150	M30×630
	Y4506-4		10000	3533	1108	800	1120	1350	450	150	M30×630
	Y4005-4	560	6000	3283	1088	710	1000	1200	400	150	M30×630
	Y4505-4		10000	3533	1108	800	1120	1350	450	150	M30×630
	Y4004-4	500	6000	3283	1088	710	1000	1200	400	150	M30×630
	Y4504-4		10000	3533	1108	800	1120	1350	450	150	M30×630
	Y4003-4	450	6000	3283	1088	710	1000	1200	400	150	M30×630
	Y4503-4		10000	3533	1108	800	1120	1350	450	150	M30×630
	Y4002-4	400	6000	3283	1088	710	1000	1200	400	150	M30×630
	Y4502-4		10000	3533	1108	800	1120	1350	450	150	M30×630
	Y4001-4	355	6000	3283	1088	710	1000	1200	400	150	M30×630
	Y4501-4		10000	3533	1108	800	1120	1350	450	150	M30×630
	Y355L2-4	315	380	2953	967	610	630	1035	355	120	M24×500
	Y3556-4		6000	3183	1068	630	900	1070	355	120	M24×500

GS350-9(M)/4

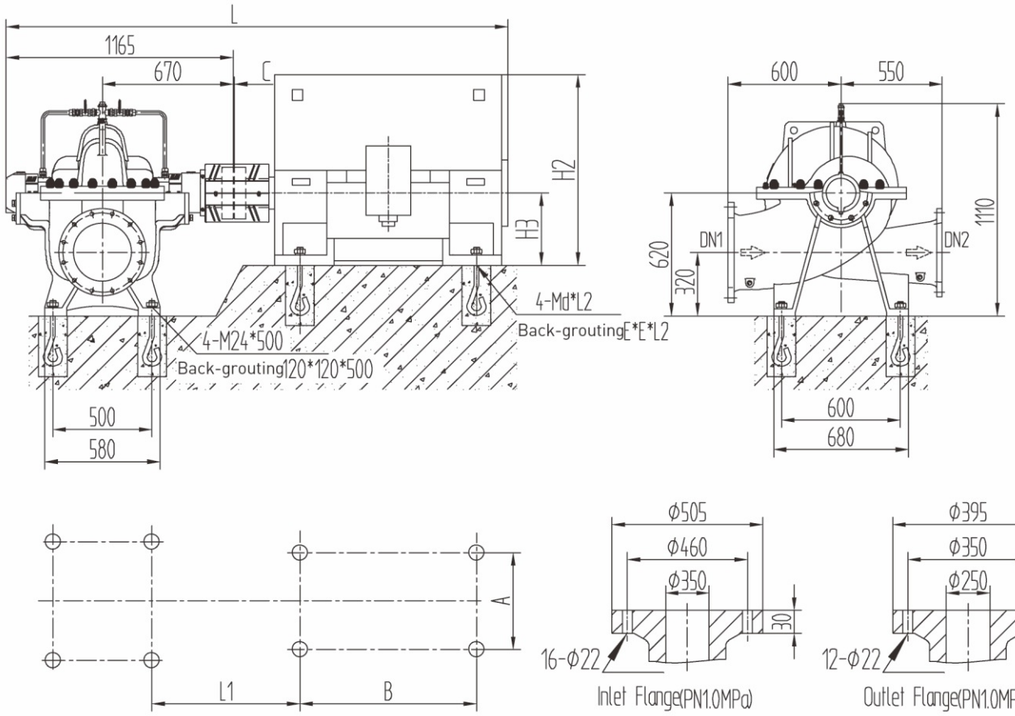

GS350-13(M)/4 GS350-19(M)/4 GS350-27(M)/4

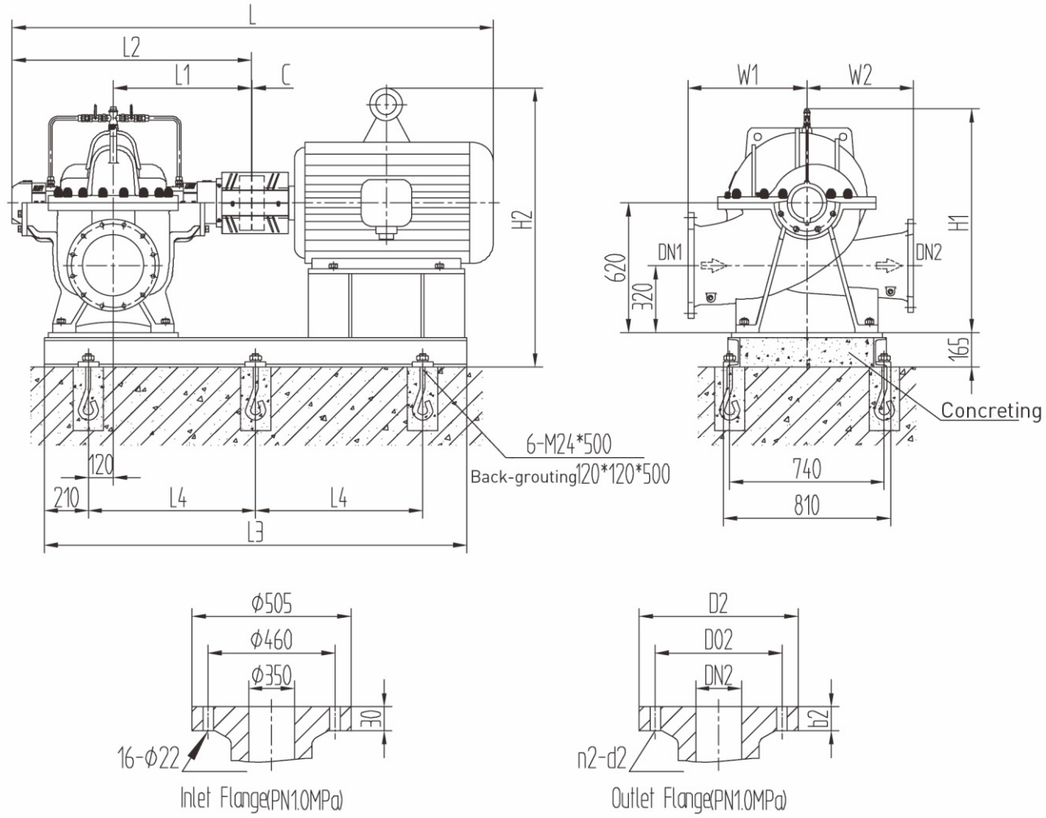

Installation Dimensions Table of Pump

Pump Type	Motor			Installation Dimensions (mm)								
	Type	Power kW	Volt. V	L	L1	A	B	H2	H3	E	C	Md×L2
GS350-9(M)/4	Y4001-4	355	6000	3073	973	710	1000	1200	400	150	6	M30×630
	Y4501-4		10000	3323	993	800	1120	1350	450	150	6	M30×630
	Y355L2-4	315	380	2743	852	610	630	1035	355	120	6	M24×500
	Y3556-4		6000	2973	953	630	900	1070	355	120	6	M24×500
	Y355L1-4	280	380	2742	851	610	630	1035	355	120	5	M24×500
	Y3555-4		6000	2972	952	630	900	1070	355	120	5	M24×500
	Y355M2-4	250	380	2742	851	610	560	1035	355	120	5	M24×500
	Y3554-4		6000	2972	952	630	900	1070	355	120	5	M24×500
	Y355M1-4	220	380	2742	851	610	560	1035	355	120	5	M24×500
	Y3553-4		6000	2972	952	630	900	1070	355	120	5	M24×500
	Y315L2-4	200	380	2512	813	508	508	865	315	120	5	M24×500

Installation Dimensions Table of Pump

Pump Type	Motor			Installation Dimensions(mm)														
	Type	Power kW	Volt. V	L	L1	L2	L3	L4	W1	W2	H1	H2	C	DN2	D02	D2	n2-d2	b2
GS350-13(M)/4	Y315L2-4	200	380	2512	670	1165	2050	810	570	510	1075	1335	5	300	400	445	12-Φ22	28
	Y315L1-4	160	380	2512	670	1165	2050	810	570	510	1075	1335	5	300	400	445	12-Φ22	28
	Y315M-4	132	380	2511	670	1165	1990	775	570	510	1075	1335	4	300	400	445	12-Φ22	28
	Y315S-4	110	380	2441	670	1165	1930	760	570	510	1075	1335	4	300	400	445	12-Φ22	28
GS350-19(M)/4	Y315M-4	132	380	2466	635	1120	1950	770	600	500	1050	1335	4	300	400	445	12-Φ22	28
	Y315S-4	110	380	2396	635	1120	1890	745	600	500	1050	1335	4	300	400	445	12-Φ22	28
	Y280M-4	90	380	2176	635	1120	1830	710	600	500	1050	1145	4	300	400	445	12-Φ22	28
	Y280S-4	75	380	2126	635	1120	1780	685	600	500	1050	1145	4	300	400	445	12-Φ22	28
GS350-27(M)/4	Y280S-4	75	380	2066	600	1060	1740	665	600	500	1065	1145	4	350	460	505	16-Φ22	30
	Y250M-4	55	380	1996	600	1060	1670	630	600	500	1065	1110	4	350	460	505	16-Φ22	30
	Y225M-4	45	380	1911	600	1060	1610	595	600	500	1065	1090	4	350	460	505	16-Φ22	30

GS400-6(M)/4

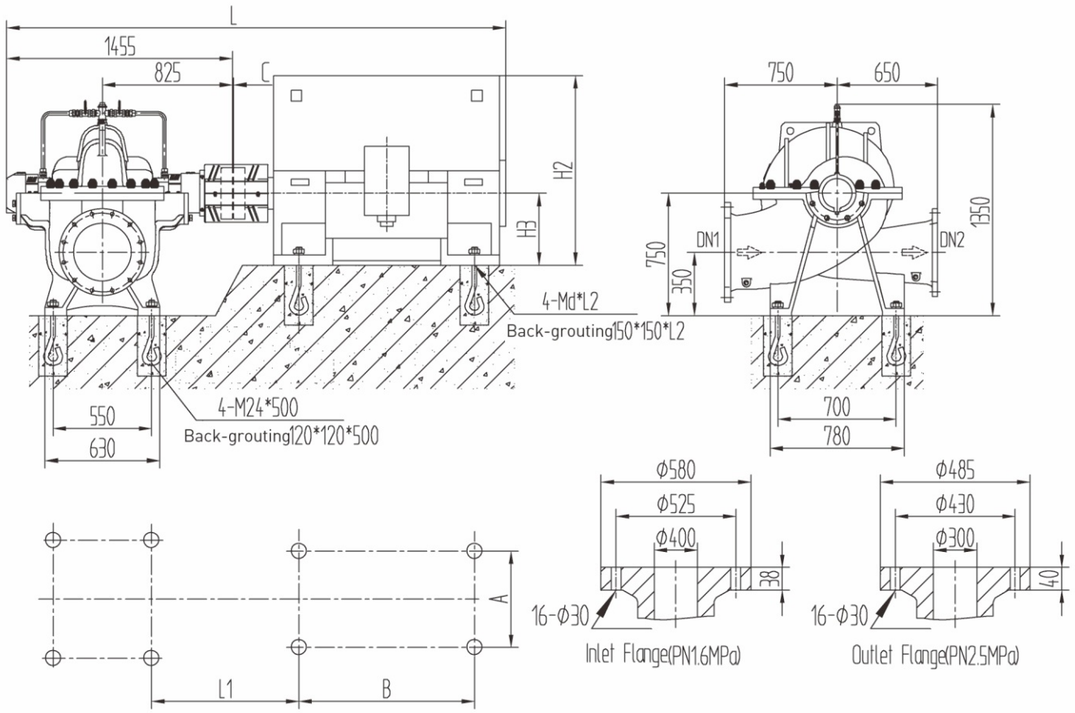

Installation Dimensions Table of Pump											
Pump Type	Motor			Installation Dimensions(mm)							
	Type	Power kW	Volt. V	L	L1	A	B	H2	H3	C	Md×L2
GS400-6(M)/4	Y5002-4	1120	6000	3924	1304	900	1250	1520	500	7	M36×800
	Y5005-4		10000	3924	1264	900	1250	1520	500	7	M36×800
	Y5001-4	1000	6000	3924	1304	900	1250	1520	500	7	M36×800
	Y5004-4		10000	3924	1264	900	1250	1520	500	7	M36×800
	Y4504-4	900	6000	3654	1144	800	1120	1350	450	7	M30×630
	Y5003-4		10000	3924	1264	900	1250	1520	500	7	M36×800
	Y4503-4	800	6000	3654	1144	800	1120	1350	450	7	M30×630
	Y5002-4		10000	3924	1264	900	1250	1520	500	7	M36×800
	Y4502-4	710	6000	3654	1144	800	1120	1350	450	7	M30×630
	Y5001-4		10000	3924	1264	900	1250	1520	500	7	M36×800
	Y4501-4	630	6000	3654	1144	800	1120	1350	450	7	M30×630
	Y4506-4		10000	3654	1144	800	1120	1350	450	7	M30×630
	Y4005-4	560	6000	3403	1123	710	1000	1200	400	6	M30×630
	Y4505-4		10000	3653	1143	800	1120	1350	450	6	M30×630

GS400-9(M)/4

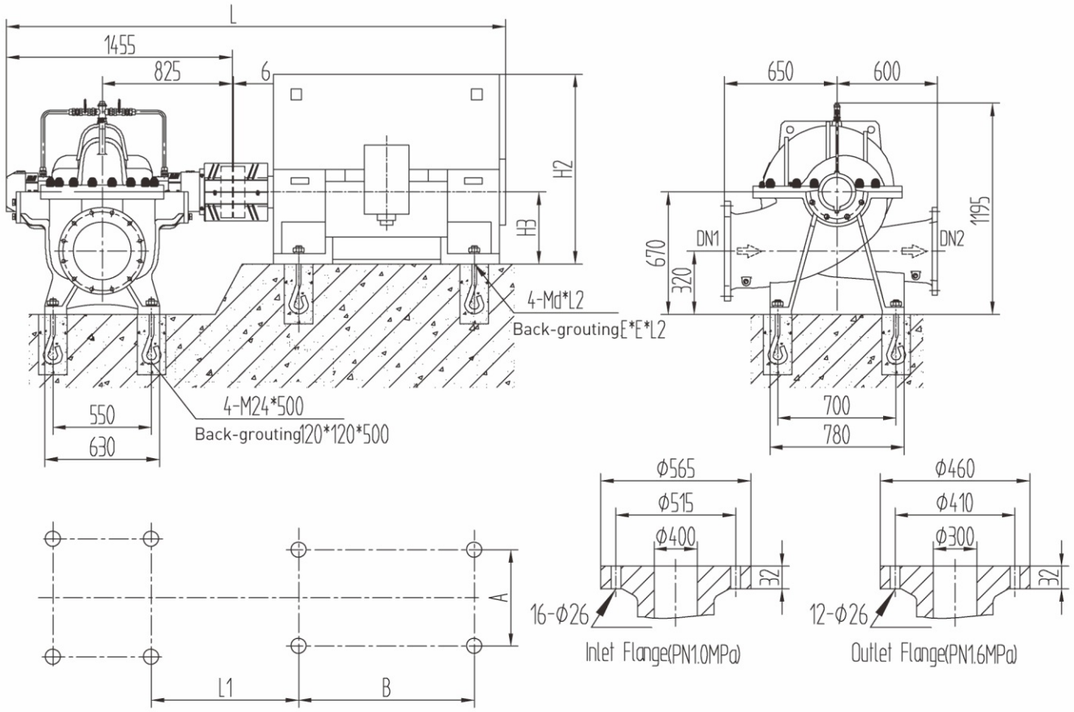

Installation Dimensions Table of Pump											
Pump Type	Motor			Installation Dimensions(mm)							
	Type	Power kW	Volt. V	L	L1	A	B	H2	H3	E	Md×L2
GS400-9(M)/4	Y4501-4	630	6000	3613	1123	800	1120	1350	450	150	M30×630
	Y4506-4		10000	3613	1123	800	1120	1350	450	150	M30×630
	Y4005-4	560	6000	3363	1103	710	1000	1200	400	150	M30×630
	Y4505-4		10000	3613	1123	800	1120	1350	450	150	M30×630
	Y4004-4	500	6000	3363	1103	710	1000	1200	400	150	M30×630
	Y4504-4		10000	3613	1123	800	1120	1350	450	150	M30×630
	Y4003-4	450	6000	3363	1103	710	1000	1200	400	150	M30×630
	Y4503-4		10000	3613	1123	800	1120	1350	450	150	M30×630
	Y4002-4	400	6000	3363	1103	710	1000	1200	400	150	M30×630
	Y4502-4		10000	3613	1123	800	1120	1350	450	150	M30×630
	Y4001-4	355	6000	3363	1103	710	1000	1200	400	150	M30×630
	Y4501-4		10000	3613	1123	800	1120	1350	450	150	M30×630
	Y355L2-4	315	380	3033	982	610	630	1035	355	120	M24×500
	Y3556-4		6000	3263	1083	630	900	1070	355	120	M24×500

GS400-13(M)/4

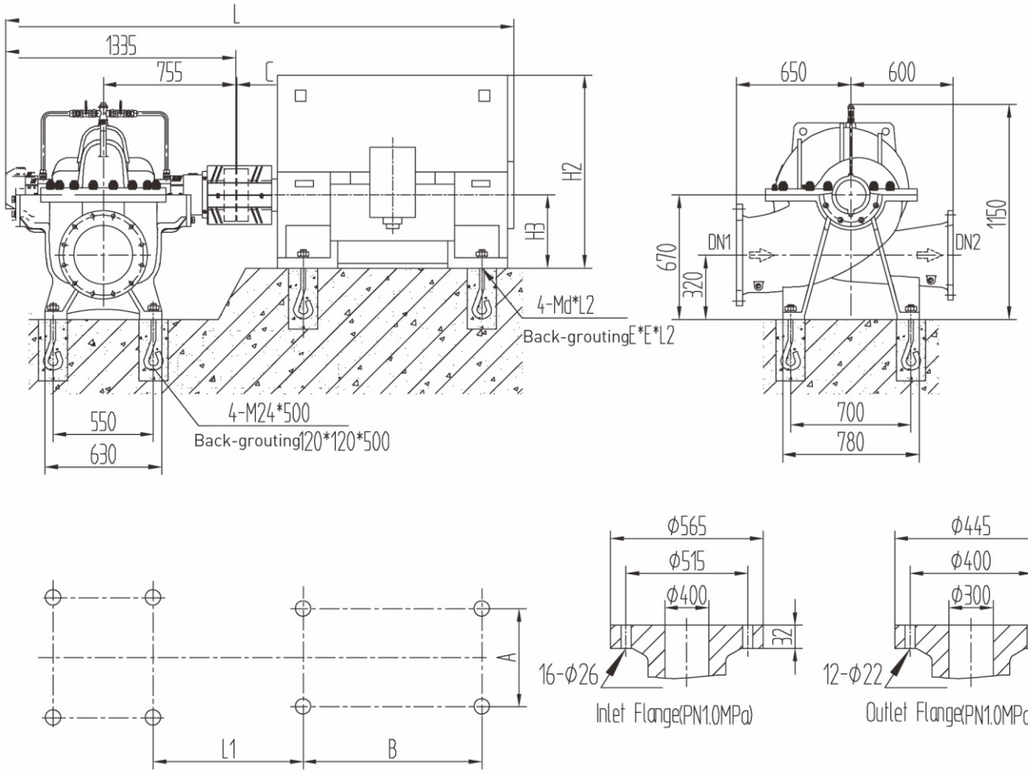

GS400-19(M)/4 GS400-27(M)/4

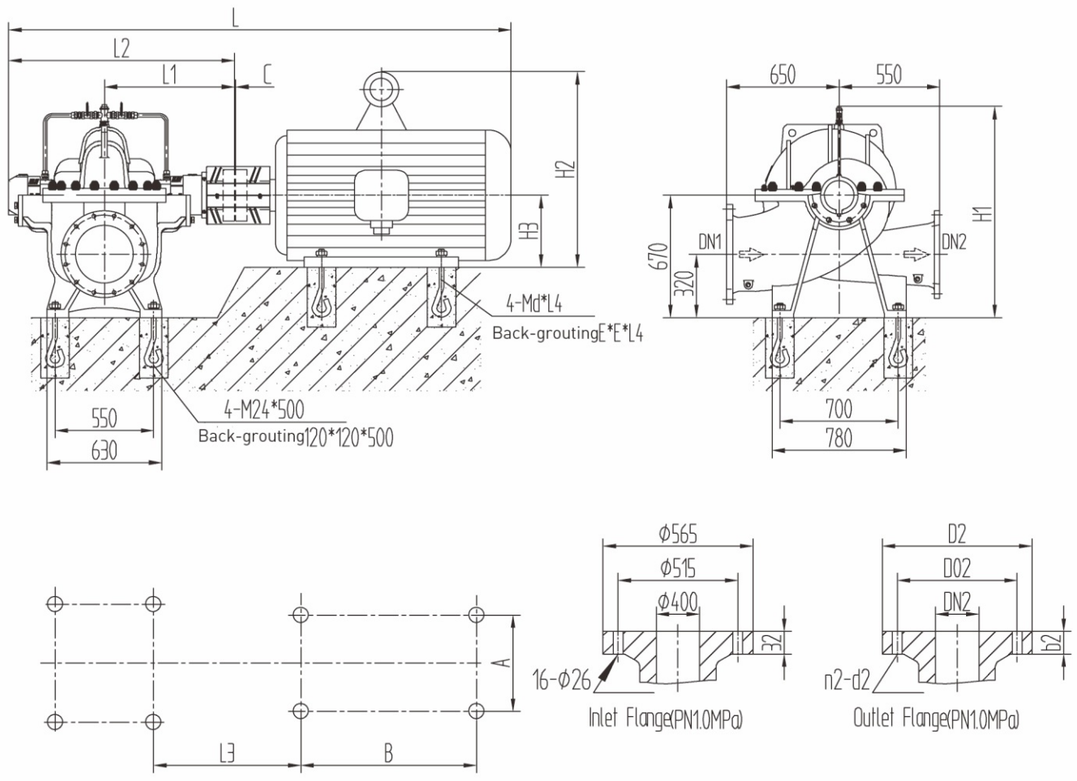

Installation Dimensions Table of Pump

Pump Type	Motor			Installation Dimensions(mm)								
	Type	Power kW	Volt. V	L	L1	A	B	H2	H3	C	E	Md×L2
GS400-13(M)/4	Y4002-4	400	6000	3243	1033	710	1000	1200	400	6	150	M30×630
	Y4502-4		10000	3493	1053	800	1120	1350	450	6	150	M30×630
	Y4001-4	355	6000	3243	1033	710	1000	1200	400	6	150	M30×630
	Y4501-4		10000	3493	1053	800	1120	1350	450	6	150	M30×630
	Y355L2-4	315	380	2913	912	610	630	1035	355	6	120	M24×500
	Y3556-4		6000	3143	1013	630	900	1070	355	6	120	M24×500
	Y355L1-4	280	380	2913	911	610	630	1035	355	5	120	M24×500
	Y3555-4		6000	3142	1012	630	900	1070	355	5	120	M24×500
	Y355M2-4	250	380	2912	911	610	560	1035	355	5	120	M24×500
	Y3554-4		6000	3142	1012	630	900	1070	355	5	120	M24×500
	Y355M1-4	220	380	2912	911	610	560	1035	355	5	120	M24×500
	Y3553-4		6000	3142	1012	630	900	1070	355	5	120	M24×500

Installation Dimensions Table of Pump

Pump Type	Motor			Installation Dimensions(mm)																
	Type	Power kW	Volt. V	L	L1	L2	L3	H1	H2	H3	A	B	C	E	Md×L4	DN2	D02	D2	n2-d2	b2
GS400-19(M)/4	Y355M2-4	250	380	2902	750	1325	906	1195	1035	355	610	560	5	120	M24×500	350	460	505	16-Φ22	30
	Y3554-4		6000	3132	750	1325	1007	1195	1070	355	630	900	5	120	M24×500	350	460	505	16-Φ22	30
	Y355M1-4	220	380	2902	750	1325	906	1195	1035	355	610	560	5	120	M24×500	350	460	505	16-Φ22	30
	Y3553-4		6000	3132	750	1325	1007	1195	1070	355	630	900	5	120	M24×500	350	460	505	16-Φ22	30
	Y315L2-4	200	380	2672	750	1325	868	1195	865	315	508	508	5	120	M24×500	350	460	505	16-Φ22	30
	Y315L1-4	160	380	2672	750	1325	868	1195	865	315	508	508	5	120	M24×500	350	460	505	16-Φ22	30
	Y315M-4	132	380	2671	750	1325	867	1195	865	315	508	457	4	120	M24×500	350	460	505	16-Φ22	30
GS400-27(M)/4	Y315L1-4	160	380	2556	680	1210	797	1170	865	315	508	508	4	120	M24×500	400	515	565	16-Φ26	32
	Y315M-4	132	380	2556	680	1210	797	1170	865	315	508	457	4	120	M24×500	400	515	565	16-Φ26	32
	Y315S-4	110	380	2486	680	1210	797	1170	865	315	508	406	4	120	M24×500	400	515	565	16-Φ26	32
	Y280M-4	90	380	2266	680	1210	741	1170	640	280	457	419	4	100	M20×400	400	515	565	16-Φ26	32

GS500-6(M)/4

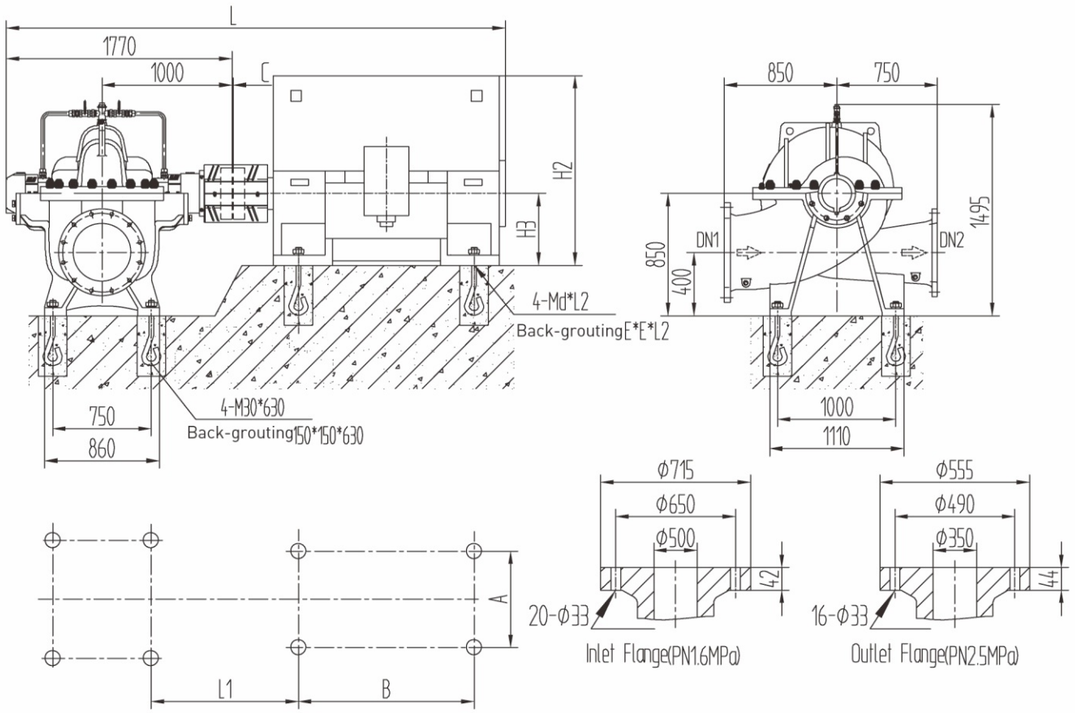

GS500-9(M)/4

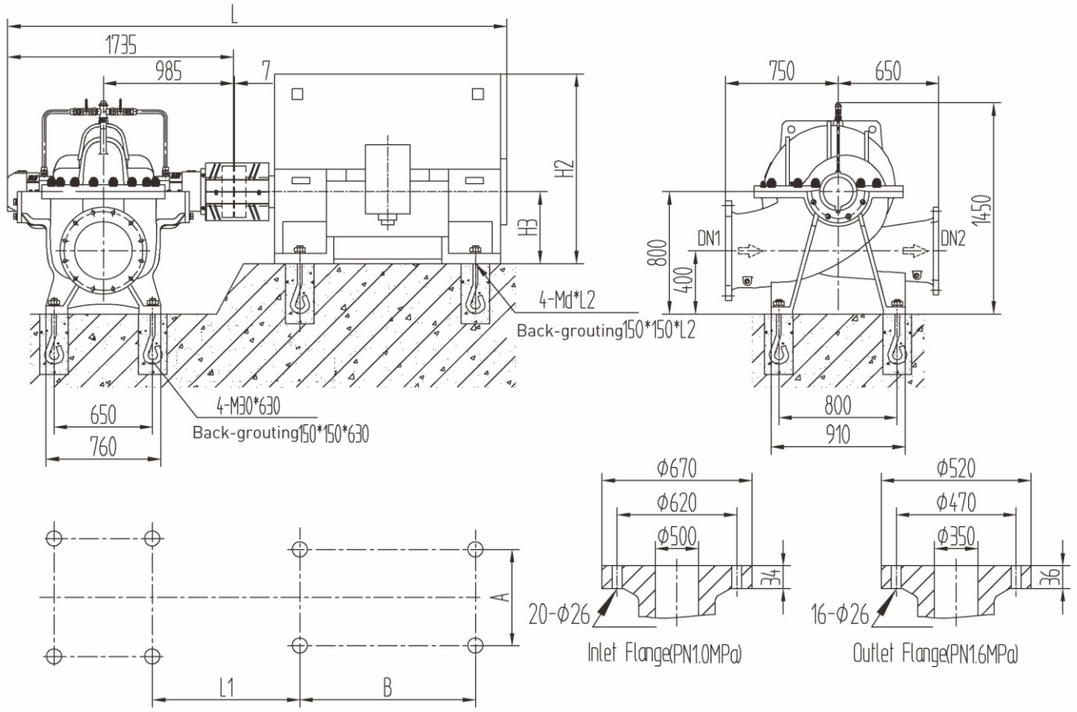

Installation Dimensions Table of Pump

Pump Type	Motor			Installation Dimensions(mm)								
	Type	Power kW	Volt. V	L	L1	A	B	H2	H3	C	E	Md×L2
GS500-6(M)/4	Y6301-4	2240	6000	4700	1465	1120	1600	2000	630	8	200	M42×800
	Y6303-4		10000	4700	1465	1120	1600	2290	630	8	200	M42×800
	Y5602-4	1800	6000	4259	1384	1000	1400	1800	560	7	150	M36×800
	Y6301-4		10000	4699	1464	1120	1600	2290	630	7	200	M42×800
	Y5601-4	1600	6000	4259	1384	1000	1400	1800	560	7	150	M36×800
	Y5603-4		10000	4419	1384	1000	1400	2150	560	7	150	M36×800
	Y5004-4	1400	6000	4199	1359	900	1250	1520	500	7	150	M36×800
	Y5602-4		10000	4419	1384	1000	1400	2150	560	7	150	M36×800
	Y5003-4	1250	6000	4199	1359	900	1250	1520	500	7	150	M36×800
	Y5601-4		10000	4419	1384	1000	1400	2150	560	7	150	M36×800
	Y5002-4	1120	6000	4199	1359	900	1250	1520	500	7	150	M36×800
	Y5005-4		10000	4199	1319	900	1250	1820	500	7	150	M36×800

Installation Dimensions Table of Pump

Pump Type	Motor			Installation Dimensions(mm)						
	Type	Power kW	Volt. V	L	L1	A	B	H2	H3	Md×L2
GS500-9(M)/4	Y5003-4	1250	6000	4164	1394	900	1250	1520	500	M36×800
	Y5601-4		10000	4384	1419	1000	1400	1800	560	M36×800
	Y5002-4	1120	6000	4164	1394	900	1250	1520	500	M36×800
	Y5005-4		10000	4164	1354	900	1250	1820	500	M36×800
	Y5001-4	1000	6000	4164	1394	900	1250	1520	500	M36×800
	Y5004-4		10000	4164	1354	900	1250	1820	500	M36×800
	Y4504-4	900	6000	3894	1234	800	1120	1350	450	M30×630
	Y5003-4		10000	4164	1354	900	1250	1820	500	M36×800
	Y4503-4	800	6000	3894	1234	800	1120	1350	450	M30×630
	Y5002-4		10000	4164	1354	900	1250	1820	500	M36×800
	Y4502-4	710	6000	3894	1234	800	1120	1350	450	M30×630
	Y5001-4		10000	4164	1354	900	1250	1820	500	M36×800

GS500-13(M)/4

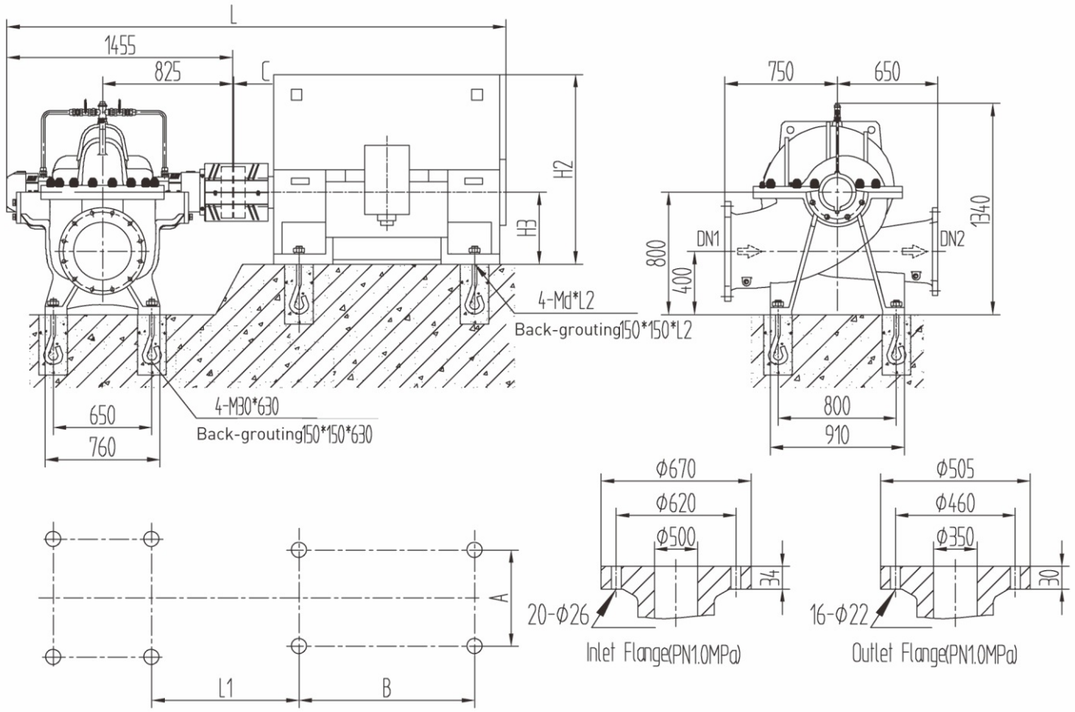

Installation Dimensions Table of Pump											
Pump Type	Motor			Installation Dimensions(mm)							
	Type	Power kW	Volt. V	L	L1	A	B	H2	H3	C	Md×L2
GS500-13(M)/4	Y4502-4	710	6000	3614	1074	800	1120	1350	450	7	M30×630
	Y5001-4		10000	3884	1194	900	1250	1520	500	7	M36×800
	Y4501-4	630	6000	3614	1074	800	1120	1350	450	7	M30×630
	Y4506-4		10000	3614	1074	800	1120	1350	450	7	M30×630
	Y4005-4	560	6000	3363	1053	710	1000	1200	400	6	M30×630
	Y4505-4		10000	3613	1073	800	1120	1350	450	6	M30×630
	Y4004-4	500	6000	3363	1053	710	1000	1200	400	6	M30×630
	Y4504-4		10000	3613	1073	800	1120	1350	450	6	M30×630
	Y4003-4	450	6000	3363	1053	710	1000	1200	400	6	M30×630
	Y4503-4		10000	3613	1073	800	1120	1350	450	6	M30×630
	Y4002-4	400	6000	3363	1053	710	1000	1200	400	6	M30×630
	Y4502-4		10000	3613	1073	800	1120	1350	450	6	M30×630

GS500-19(M)/4

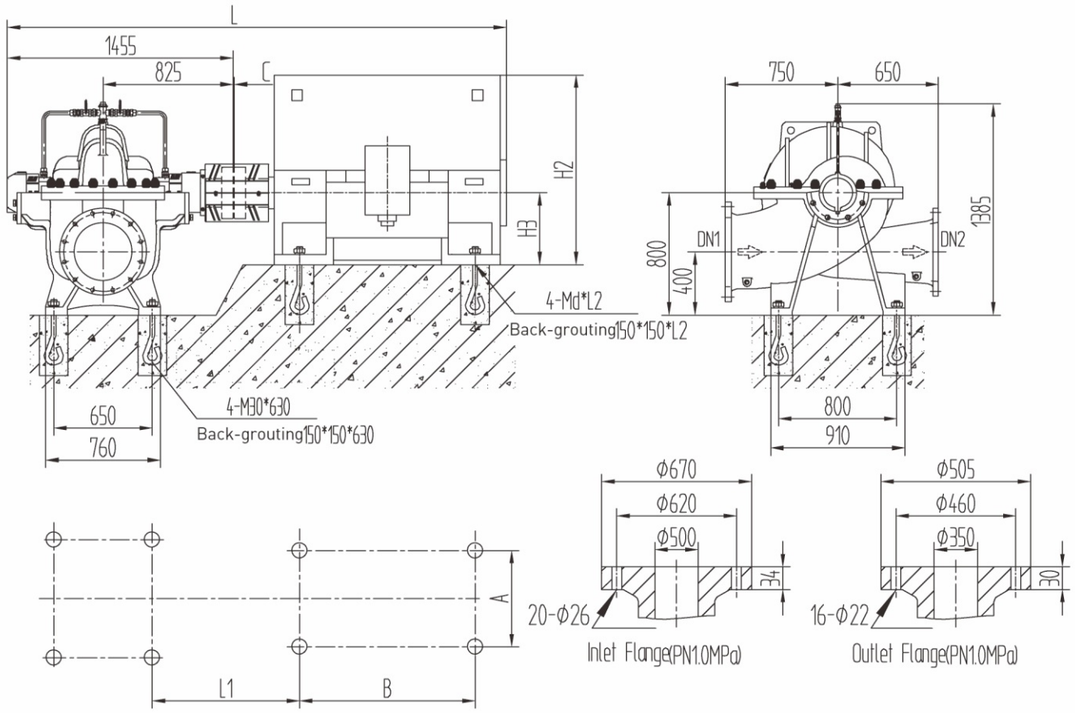

Installation Dimensions Table of Pump											
Pump Type	Motor			Installation Dimensions(mm)							
	Type	Power kW	Volt. V	L	L1	A	B	H2	H3	C	Md×L2
GS500-19(M)/4	Y4003-4	450	6000	3363	1053	710	1000	1200	400	6	M30×630
	Y4503-4		10000	3613	1073	800	1120	1350	450	6	M30×630
	Y4002-4	400	6000	3363	1053	710	1000	1200	400	6	M30×630
	Y4502-4		10000	3613	1073	800	1120	1350	450	6	M30×630
	Y4001-4	355	6000	3363	1053	710	1000	1200	400	6	M30×630
	Y4501-4		10000	3613	1073	800	1120	1350	450	6	M30×630
	Y355L2-4	315	380	3033	932	610	630	1035	355	6	M24×500
	Y3556-4		6000	3263	1033	630	900	1070	355	6	M24×500
	Y355L1-4	280	380	3032	931	610	630	1035	355	5	M24×500
	Y3555-4		6000	3262	1032	630	900	1070	355	5	M24×500
	Y355M2-4	250	380	3032	931	610	560	1035	355	5	M24×500
	Y3554-4		6000	3262	1032	630	900	1070	355	5	M24×500

GS500-27(M)/4 GS500-27(M)/6

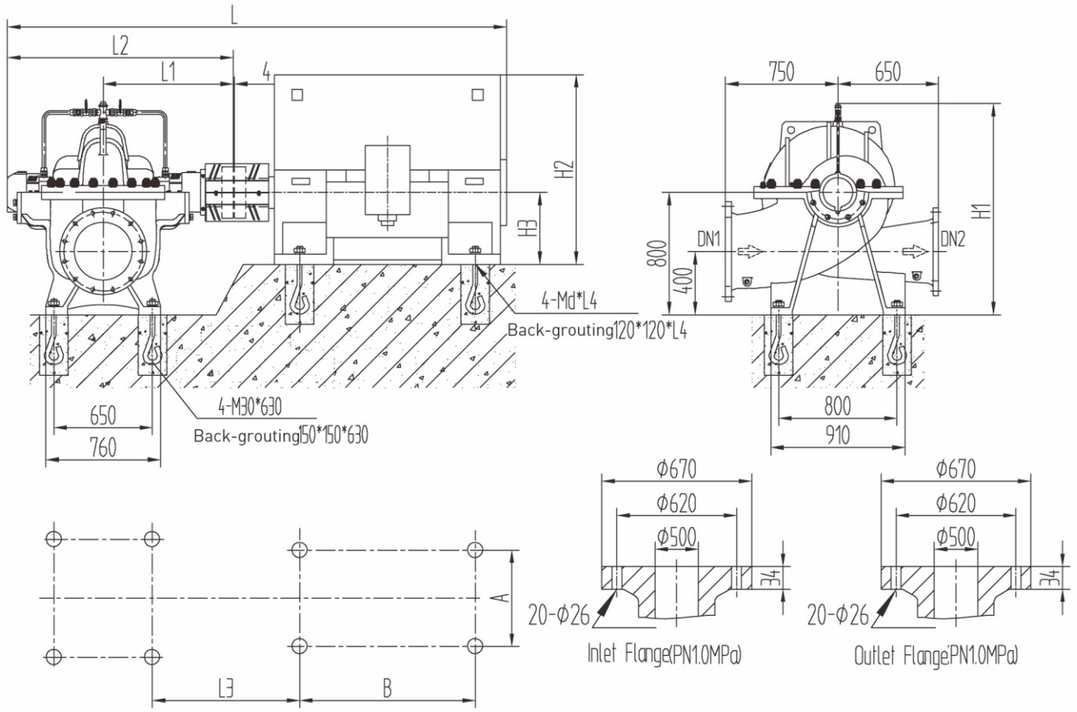

GS500-6(M)/6

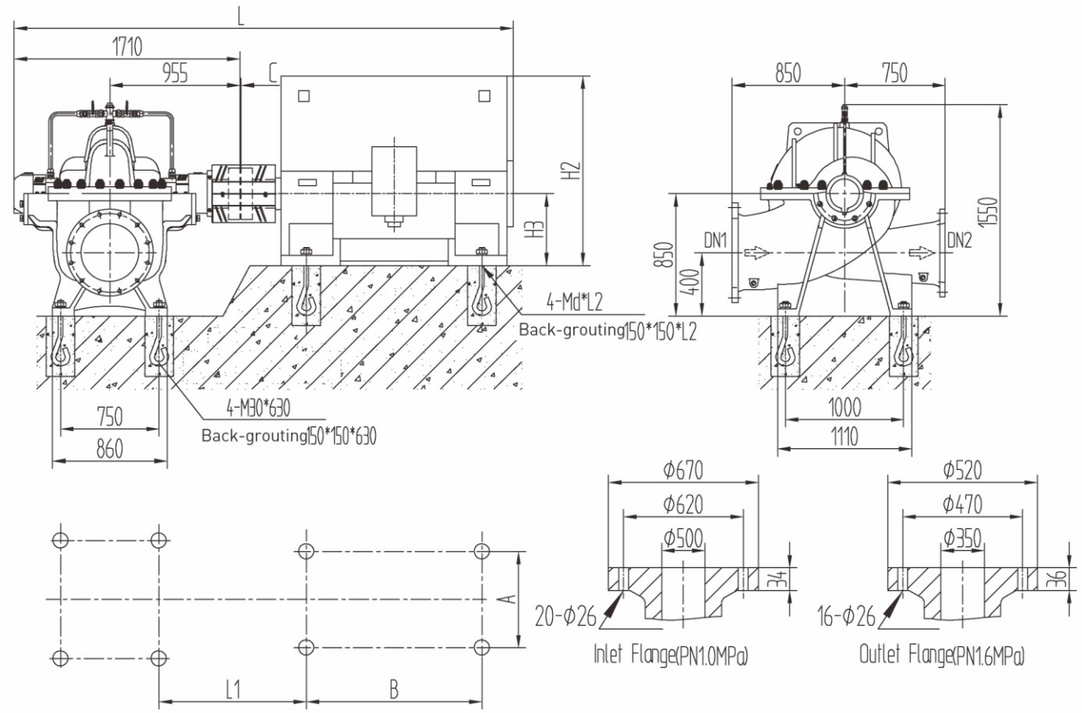

Installation Dimensions Table of Pump

Pump Type	Motor			Installation Dimensions(mm)									
	Type	Power kW	Volt. V	L	L1	L2	L3	A	B	H1	H2	H3	Md×L4
GS500-27(M)/4	Y355L1-4	280	380	3042	820	1465	926	610	630	1415	1035	355	M24×500
	Y3555-4		6000	3272	820	1465	1027	630	900	1415	1070	355	M24×500
	Y355M2-4	250	380	3042	820	1465	926	610	560	1415	1035	355	M24×500
	Y3554-4		6000	3272	820	1465	1027	630	900	1415	1070	355	M24×500
	Y355M1-4	220	380	3042	820	1465	926	610	560	1415	1035	355	M24×500
	Y3553-4		6000	3272	820	1465	1027	630	900	1415	1070	355	M24×500
	Y315L2-4	200	380	2812	820	1465	888	508	508	1415	865	315	M24×500
	Y315L1-4	160	380	2812	820	1465	888	508	508	1415	865	315	M24×500
GS500-27(M)/6	Y315M-6	90	380	2671	750	1325	817	508	457	1365	865	315	M24×500
	Y315S-6	75	380	2601	750	1325	817	508	406	1365	865	315	M24×500
	Y280M-6	55	380	2381	750	1325	761	457	419	1365	640	280	M20×400

Installation Dimensions Table of Pump

Pump Type	Motor			Installation Dimensions(mm)							
	Type	Power kW	Volt. V	L	L1	A	B	H2	H3	C	Md×L2
GS500-6(M)/6	Y5002-6	800	6000	3909	1314	900	1250	1520	500	7	M36×800
	Y5005-6		10000	4119	1314	900	1250	1520	500	7	M36×800
	Y5001-6	710	6000	3909	1314	900	1250	1520	500	7	M36×800
	Y5004-6		10000	4119	1314	900	1250	1520	500	7	M36×800
	Y4504-6	630	6000	3799	1194	800	1120	1350	450	7	M30×630
	Y5003-6		10000	4119	1314	900	1250	1520	500	7	M36×800
	Y4502-6	500	6000	3799	1194	800	1120	1350	450	7	M30×630
	Y5001-6		10000	4119	1314	900	1250	1520	500	7	M36×800
	Y4501-6	450	6000	3799	1194	800	1120	1350	450	7	M30×630
	Y4506-6		10000	3869	1154	800	1120	1350	450	7	M30×630
	Y4005-6	400	6000	3618	1133	710	1000	1200	400	6	M30×630
	Y4505-6		10000	3868	1153	800	1120	1350	450	6	M30×630

GS500-9(M)/6

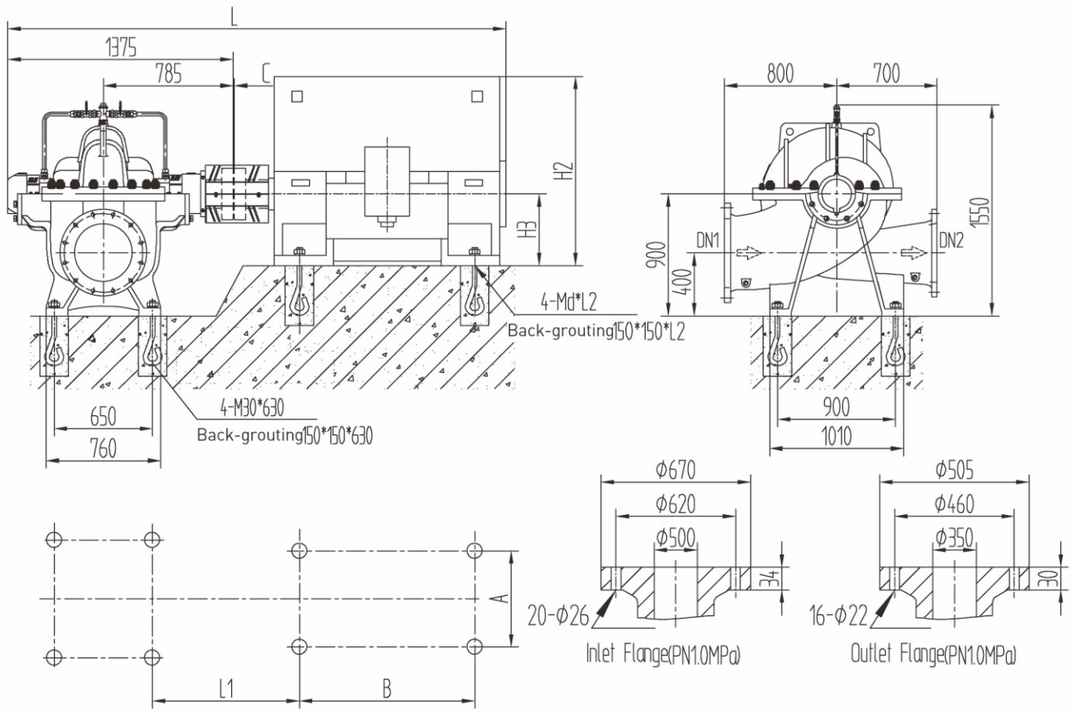

GS500-13(M)/6 GS500-19(M)/6

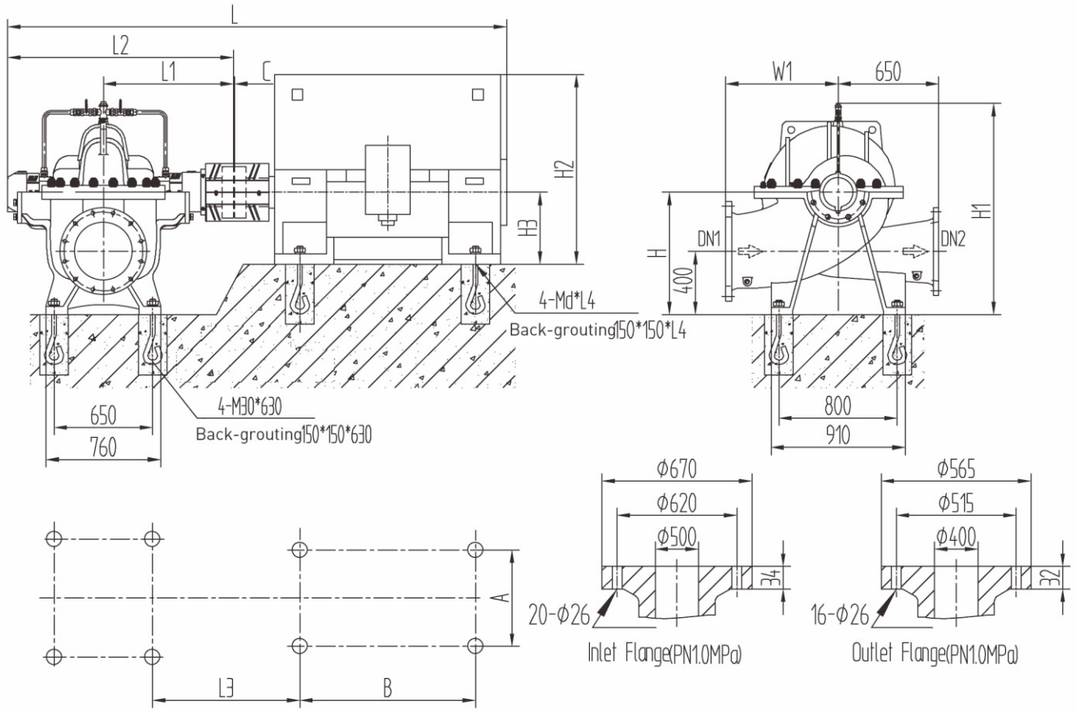

Installation Dimensions Table of Pump

Pump Type	Motor			Installation Dimensions (mm)							
	Type	Power kW	Volt. V	L	L1	A	B	H2	H3	C	Md×L2
GS500-9(M)/6	Y4501-6	450	6000	3464	1074	800	1120	1350	450	7	M30×630
	Y4506-6		10000	3534	1034	800	1120	1350	450	7	M30×630
	Y4005-6	400	6000	3283	1013	710	1000	1200	400	6	M30×630
	Y4505-6		10000	3533	1033	800	1120	1350	450	6	M30×630
	Y4004-6	355	6000	3283	1013	710	1000	1200	400	6	M30×630
	Y4504-6		10000	3533	1033	800	1120	1350	450	6	M30×630
	Y4003-6	315	6000	3283	1013	710	1000	1200	400	6	M30×630
	Y4503-6		10000	3533	1033	800	1120	1350	450	6	M30×630
	Y4002-6	280	6000	3283	1013	710	1000	1200	400	6	M30×630
	Y4502-6		10000	3533	1033	800	1120	1350	450	6	M30×630
	Y355L3-6	250	380	2953	892	610	630	1035	355	6	M24×500
	Y3556-6		6000	3183	993	630	900	1070	355	6	M24×500
	Y355L1-6	220	380	2593	892	610	630	1035	355	6	M24×500
	Y3555-6		6000	3183	993	630	900	1070	355	6	M24×500

Installation Dimensions Table of Pump

Pump Type	Motor			Installation Dimensions (mm)												
	Type	Power kW	Volt. V	L	L1	L2	L3	A	B	W1	H	H1	H2	H3	C	Md×L4
GS500-13(M)/6	Y4002-6	280	6000	3303	785	1395	1013	710	1000	800	850	1450	1200	400	6	M30×630
	Y4502-6		10000	3553	785	1395	1033	800	1120	800	850	1450	1350	450	6	M30×630
	Y3556-6	250	6000	3203	785	1395	993	630	900	800	850	1450	1070	355	6	M24×500
	Y4501-6		10000	3553	785	1395	1033	800	1120	800	850	1450	1350	450	6	M30×630
	Y355L1-6	220	380	2973	785	1395	892	610	630	800	850	1450	1035	355	6	M24×500
	Y3555-6		6000	3203	785	1395	993	630	900	800	850	1450	1070	355	6	M24×500
	Y355M3-6	200	380	2972	785	1395	891	610	560	800	850	1450	1035	355	5	M24×500
	Y3554-6		6000	3202	785	1395	992	630	900	800	850	1450	1070	355	5	M24×500
	Y355M2-6	185	380	2972	785	1395	891	610	560	800	850	1450	1035	355	5	M24×500
	Y355M1-6	160	380	2972	785	1395	891	610	560	800	850	1450	1035	355	5	M24×500
	Y315L2-6	132	380	2742	785	1395	853	508	508	800	850	1450	865	315	5	M24×500
GS500-19(M)/6	Y355M2-6	185	380	2902	750	1325	856	610	560	750	800	1355	1035	355	5	M24×500
	Y355M1-6	160	380	2902	750	1325	856	610	560	750	800	1355	1035	355	5	M24×500
	Y315L2-6	132	380	2672	750	1325	818	508	508	750	800	1355	865	315	5	M24×500
	Y315L1-6	110	380	2672	750	1325	818	508	508	750	800	1355	865	315	5	M24×500
	Y315M-6	90	380	2671	750	1325	817	508	457	750	800	1355	865	315	4	M24×500

GS600-6(M)/6

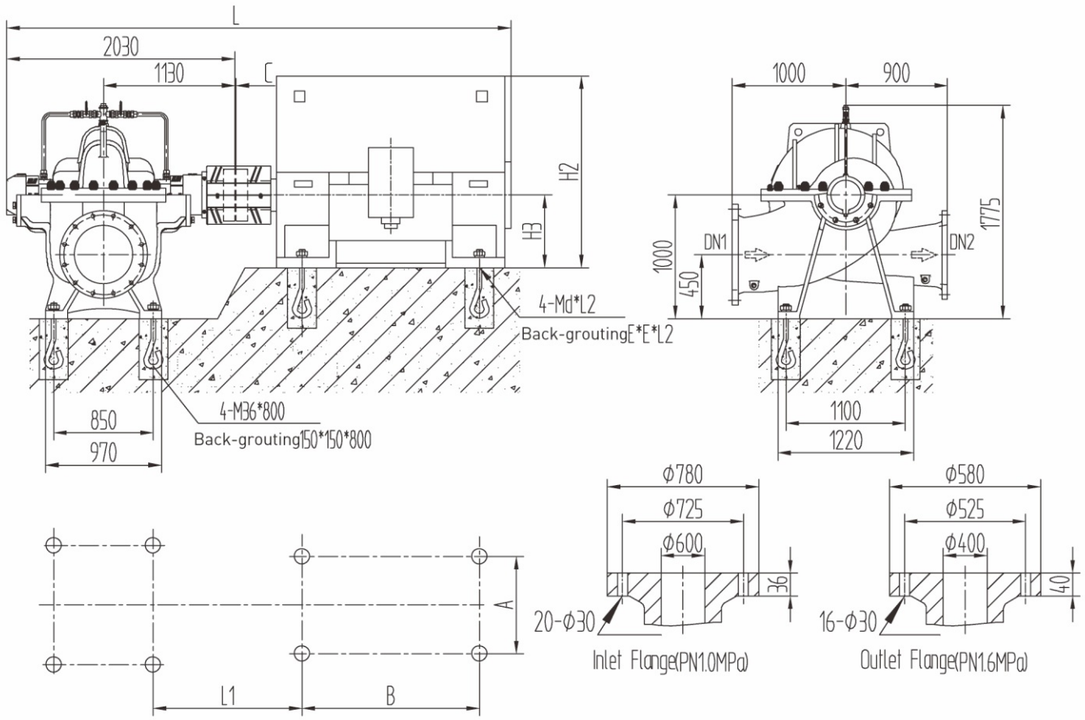

Installation Dimensions Table of Pump												
Pump Type	Motor			Installation Dimensions(mm)								
	Type	Power kW	Volt. V	L	L1	A	B	H2	H3	C	E	Md×L2
GS600-6(M)/6	Y6301-6	1600	6000	4860	1545	1120	1600	2000	630	8	200	M42×800
	Y6302-6		10000	4960	1545	1120	1600	2000	630	8	200	M42×800
	Y5603-6	1400	6000	4570	1515	1000	1400	1800	560	8	150	M36×800
	Y6301-6		10000	4960	1545	1120	1600	2000	630	8	200	M42×800
	Y5602-6	1250	6000	4569	1514	1000	1400	1800	560	7	150	M36×800
	Y5604-6		10000	4569	1514	1000	1400	1800	560	7	150	M36×800
	Y5004-6	1000	6000	4229	1439	900	1250	1520	500	7	150	M36×800
	Y5602-6		10000	4569	1514	1000	1400	1800	560	7	150	M36×800
	Y5003-6	900	6000	4229	1439	900	1250	1520	500	7	150	M36×800
	Y5601-6		10000	4569	1514	1000	1400	1800	560	7	150	M36×800
	Y5002-6	800	6000	4229	1439	900	1250	1520	500	7	150	M36×800
	Y5005-6		10000	4439	1439	900	1250	1520	500	7	150	M36×800

GS600-9(M)/6

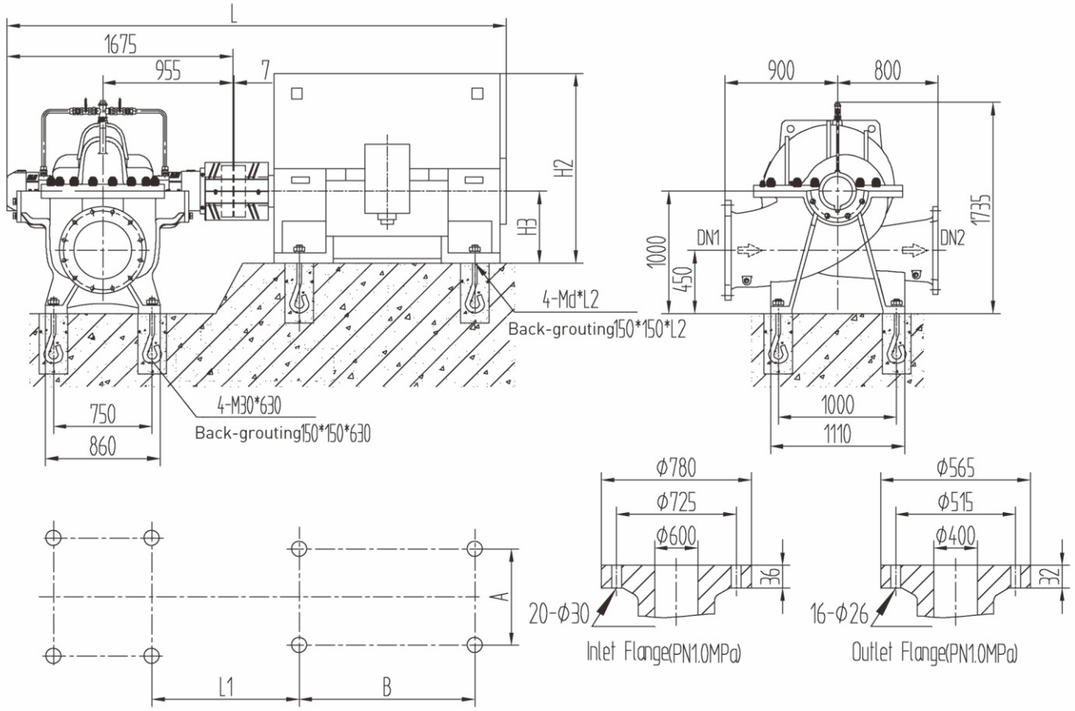

Installation Dimensions Table of Pump										
Pump Type	Motor			Installation Dimensions(mm)						
	Type	Power kW	Volt. V	L	L1	A	B	H2	H3	Md×L2
GS600-9(M)/6	Y5003-6	900	6000	3874	1314	900	1250	1520	500	M36×800
	Y5601-6		10000	4214	1389	1000	1400	1800	560	M36×800
	Y5002-6	800	6000	3874	1314	900	1250	1520	500	M36×800
	Y5005-6		10000	4084	1314	900	1250	1520	500	M36×800
	Y5001-6	710	6000	3874	1314	900	1250	1520	500	M36×800
	Y5004-6		10000	4084	1314	900	1250	1520	500	M36×800
	Y4504-6	630	6000	3764	1194	800	1120	1350	450	M30×630
	Y5003-6		10000	4084	1314	900	1250	1520	500	M36×800
	Y4503-6	560	6000	3764	1194	800	1120	1350	450	M30×630
	Y5002-6		10000	4084	1314	900	1250	1520	500	M36×800
	Y4502-6	500	6000	3764	1194	800	1120	1350	450	M30×630
	Y5001-6		10000	4084	1314	900	1250	1520	500	M36×800
	Y4501-6	450	6000	3764	1194	800	1120	1350	450	M30×630
	Y4506-6		10000	3834	1154	800	1120	1350	450	M30×630

GS600-13(M)/6

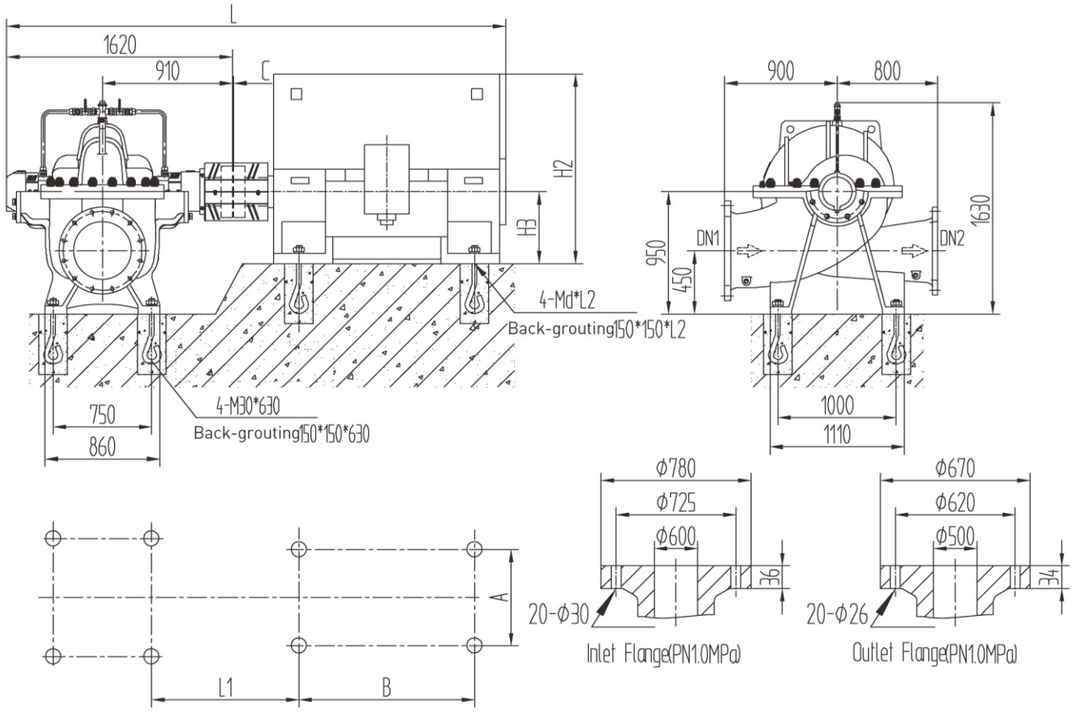

GS600-19(M)/6 GS600-23(M)/6

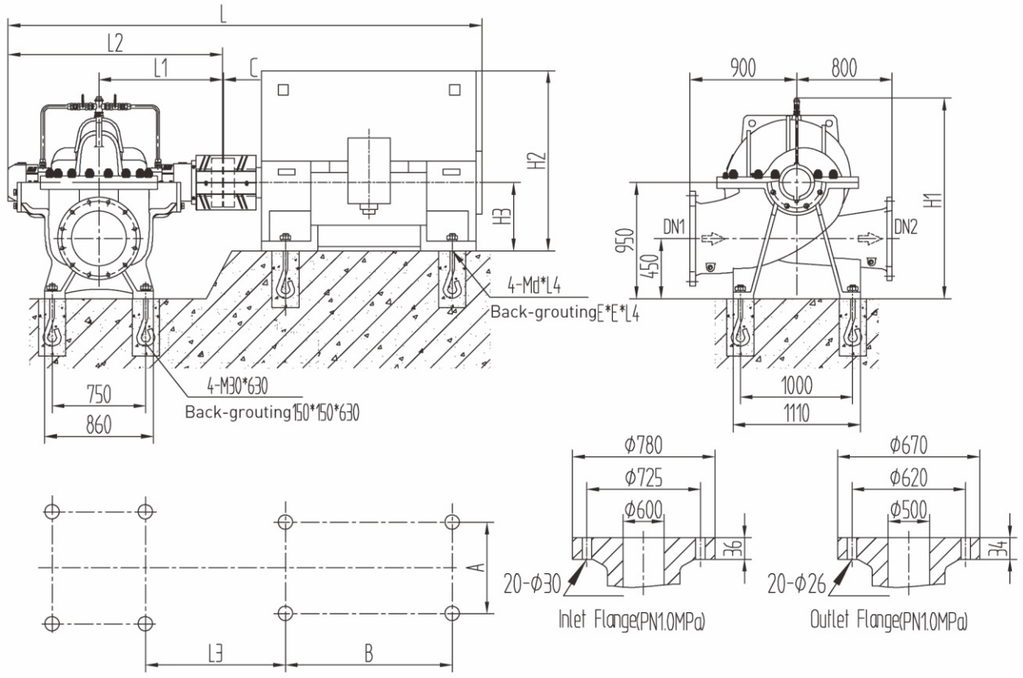

Installation Dimensions Table of Pump

Pump Type	Motor			Installation Dimensions (mm)							
	Type	Power kW	Volt. V	L	L1	A	B	H2	H3	C	Md×L2
GS600-13(M)/6	Y4503-6	560	6000	3709	1149	800	1120	1350	450	7	M30×630
	Y5002-6		10000	4029	1269	900	1250	1520	500	7	M36×800
	Y4502-6	500	6000	3709	1149	800	1120	1350	450	7	M30×630
	Y5001-6		10000	4029	1269	900	1250	1520	500	7	M36×800
	Y4501-6	450	6000	3709	1149	800	1120	1350	450	7	M30×630
	Y4506-6		10000	3778	1108	800	1120	1350	450	7	M30×630
	Y4005-6	400	6000	3528	1088	710	1000	1200	400	6	M30×630
	Y4505-6		10000	3778	1108	800	1120	1350	450	6	M30×630
	Y4004-6	355	6000	3528	1088	710	1000	1200	400	6	M30×630
	Y4504-6		10000	3778	1108	800	1120	1350	450	6	M30×630
	Y4003-6	315	6000	3528	1088	710	1000	1200	400	6	M30×630
	Y4503-6		10000	3778	1108	800	1120	1350	450	6	M30×630

Installation Dimensions Table of Pump

Pump Type	Motor			Installation Dimensions (mm)											
	Type	Power kW	Volt. V	L	L1	L2	L3	A	B	H1	H2	H3	C	E	Md×L4
GS600-19(M)/6	Y4004-6	355	6000	3403	845	1495	1023	710	1000	1590	1200	400	6	150	M30×630
	Y4504-6		10000	3653	845	1495	1043	800	1120	1590	1350	450	6	150	M30×630
	Y4003-6	315	6000	3403	845	1495	1023	710	1000	1590	1200	400	6	150	M30×630
	Y4503-6		10000	3653	845	1495	1043	800	1120	1590	1350	450	6	150	M30×630
	Y4002-6	280	6000	3403	845	1495	1023	710	1000	1590	1200	400	6	150	M30×630
	Y4502-6		10000	3653	845	1495	1043	800	1120	1590	1350	450	6	150	M30×630
	Y3556-6	250	6000	3303	845	1495	1003	630	900	1590	1070	355	6	120	M24×500
	Y4501-6		10000	3653	845	1495	1043	800	1120	1590	1350	450	6	150	M30×630
	Y355L1-6	220	380	3073	845	1495	902	610	630	1590	1035	355	6	120	M24×500
	Y3555-6		6000	3303	845	1495	1003	630	900	1590	1070	355	6	120	M24×500
	Y355M3-6	200	380	3072	845	1495	901	610	560	1590	1035	355	5	120	M24×500
	Y3554-6		6000	3302	845	1495	1002	630	900	1590	1070	355	5	120	M24×500
GS600-23(M)/6	Y3556-6	250	6000	3263	815	1455	973	630	900	1565	1070	355	6	120	M24×500
	Y4501-6		10000	3613	815	1455	1013	800	1120	1565	1350	450	6	150	M30×630
	Y355L1-6	220	380	3033	815	1455	872	610	630	1565	1035	355	6	120	M24×500
	Y3555-6		6000	3263	815	1455	973	630	900	1565	1070	355	6	120	M24×500
	Y355M3-6	200	380	3032	815	1455	871	610	560	1565	1035	355	5	120	M24×500
	Y3554-6		6000	3262	815	1455	972	630	900	1565	1070	355	5	120	M24×500
	Y355M1-6	160	380	3032	815	1455	871	610	560	1565	1035	355	5	120	M24×500
	Y315L2-6	132	380	2802	815	1455	833	508	508	1565	865	315	5	120	M24×500

GS700-9(M)/6

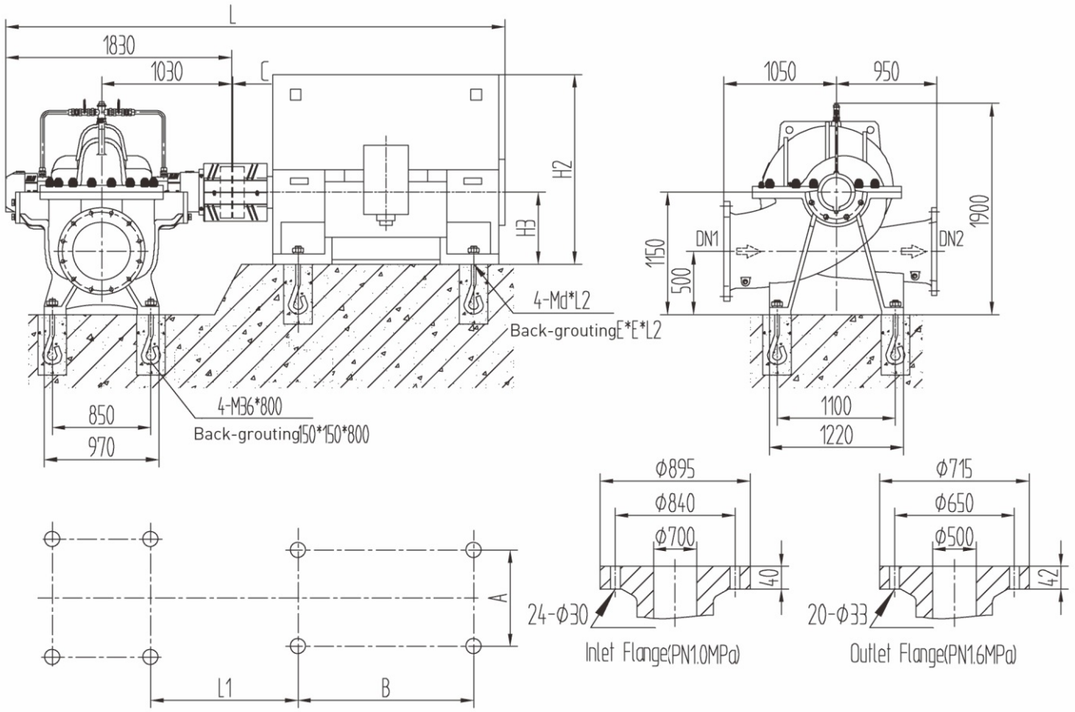

Installation Dimensions Table of Pump												
Pump Type	Motor			Installation Dimensions (mm)								
	Type	Power kW	Volt. V	L	L1	A	B	H2	H3	C	E	Md×L2
GS700-9(M)/6	Y6303-6	2000	6000	4660	1445	1120	1600	2000	630	8	200	M42×800
	Y710-6		10000	5040	1495	1400	1800	2330	710	8	200	M48×1000
	Y6301-6	1600	6000	4660	1445	1120	1600	2000	630	8	200	M42×800
	Y6302-6		10000	4760	1445	1120	1600	2000	630	8	200	M42×800
	Y5603-6	1400	6000	4370	1415	1000	1400	1800	560	8	150	M36×800
	Y6301-6		10000	4760	1445	1120	1600	2000	630	8	200	M42×800
	Y5602-6	1250	6000	4369	1414	1000	1400	1800	560	7	150	M36×800
	Y5604-6		10000	4369	1414	1000	1400	1800	560	7	150	M36×800
	Y5603-6	1120	6000	4369	1414	1000	1400	1800	560	7	150	M36×800
	Y5601-6		10000	4369	1414	1000	1400	1800	560	7	150	M36×800
	Y5004-6	1000	6000	4029	1339	900	1250	1520	500	7	150	M36×800
	Y5602-6		10000	4369	1414	1000	1400	1800	560	7	150	M36×800

GS700-13(M)/6

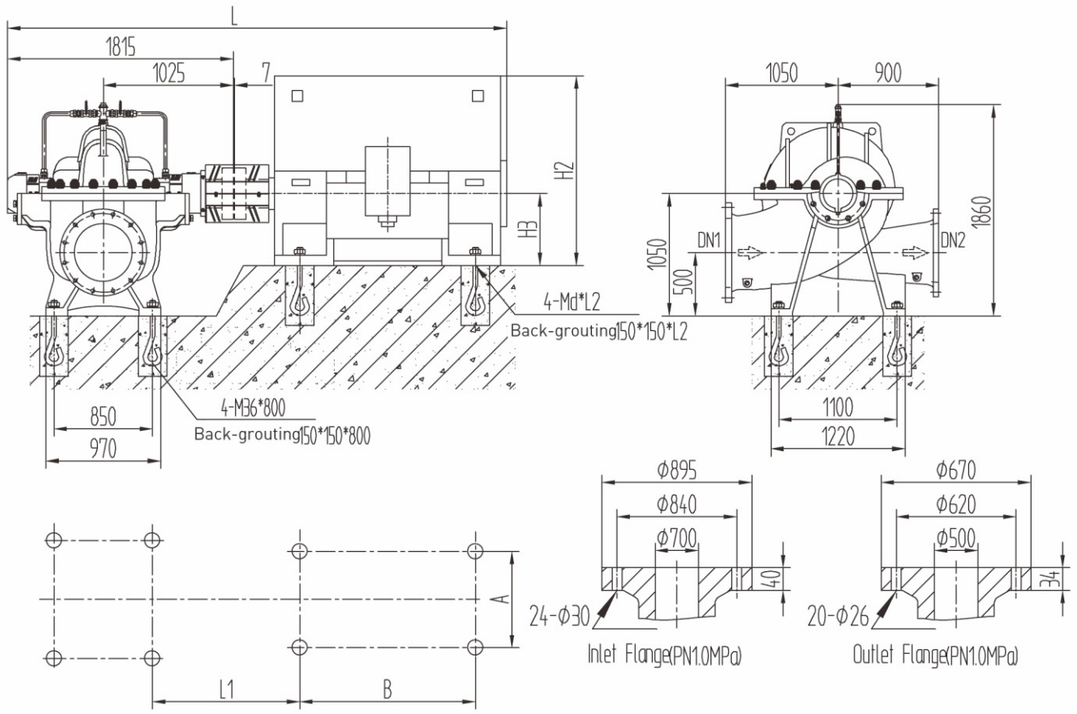

Installation Dimensions Table of Pump										
Pump Type	Motor			Installation Dimensions (mm)						
	Type	Power kW	Volt. V	L	L1	A	B	H2	H3	Md×L2
GS700-13(M)/6	Y5004-6	1000	6000	4014	1334	900	1250	1520	500	M36×800
	Y5602-6		10000	4354	1409	1000	1400	1800	560	M36×800
	Y5003-6	900	6000	4014	1334	900	1250	1520	500	M36×800
	Y5601-6		10000	4354	1409	1000	1400	1800	560	M36×800
	Y5002-6	800	6000	4014	1334	900	1250	1520	500	M36×800
	Y5005-6		10000	4224	1334	900	1250	1520	500	M36×800
	Y5001-6	710	6000	4014	1334	900	1250	1520	500	M36×800
	Y5004-6		10000	4224	1334	900	1250	1520	500	M36×800
	Y4504-6	630	6000	3904	1214	800	1120	1350	450	M30×630
	Y5003-6		10000	4224	1334	900	1250	1520	500	M36×800
	Y4503-6	560	6000	3904	1214	800	1120	1350	450	M30×630
	Y5002-6		10000	4224	1334	900	1250	1520	500	M36×800

GS700-19(M)/6

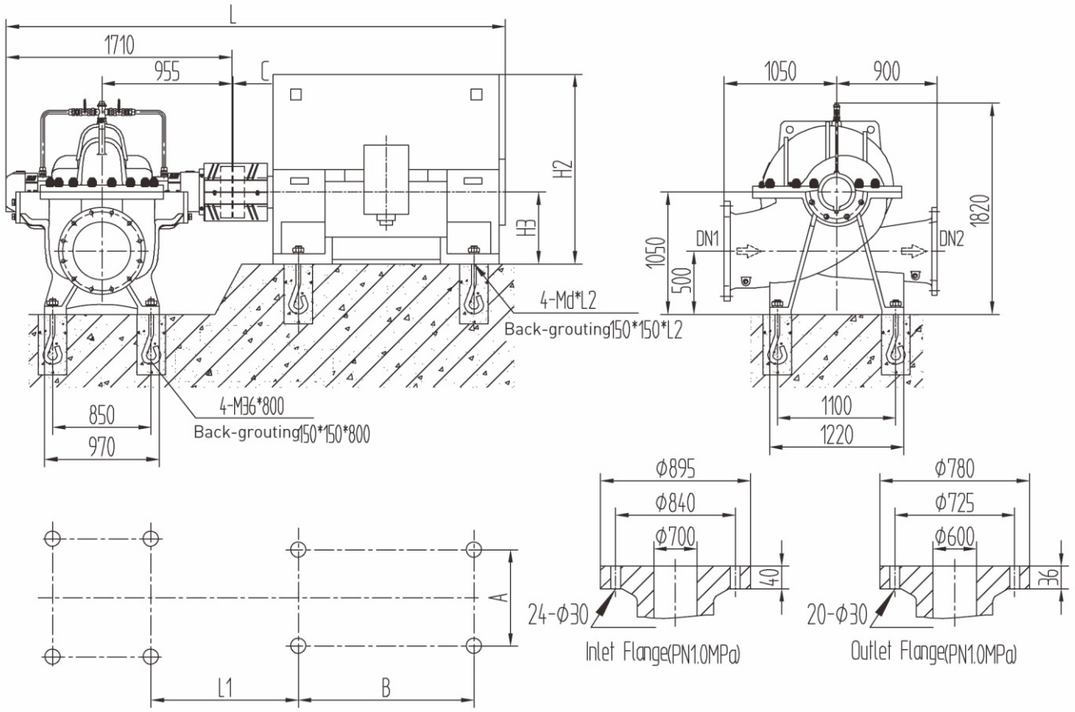

Installation Dimensions Table of Pump											
Pump Type	Motor			Installation Dimensions(mm)							
	Type	Power kW	Volt. V	L	L1	A	B	H2	H3	C	Md×L2
GS700-19(M)/6	Y4504-6	630	6000	3799	1144	800	1120	1350	450	7	M30×630
	Y5003-6		10000	4119	1264	900	1250	1520	500	7	M36×800
	Y4503-6	560	6000	3799	1144	800	1120	1350	450	7	M30×630
	Y5002-6		10000	4119	1264	900	1250	1520	500	7	M36×800
	Y4502-6	500	6000	3799	1144	800	1120	1350	450	7	M30×630
	Y5001-6		10000	4119	1264	900	1250	1520	500	7	M36×800
	Y4501-6	450	6000	3799	1144	800	1120	1350	450	7	M30×630
	Y4506-6		10000	3869	1104	800	1120	1350	450	7	M30×630
	Y4005-6	400	6000	3618	1083	710	1000	1200	400	6	M30×630
	Y4505-6		10000	3868	1103	800	1120	1350	450	6	M30×630
	Y4004-6	355	6000	3618	1083	710	1000	1200	400	6	M30×630
	Y4504-6		10000	3868	1103	800	1120	1350	450	6	M30×630

GS700-23(M)/6

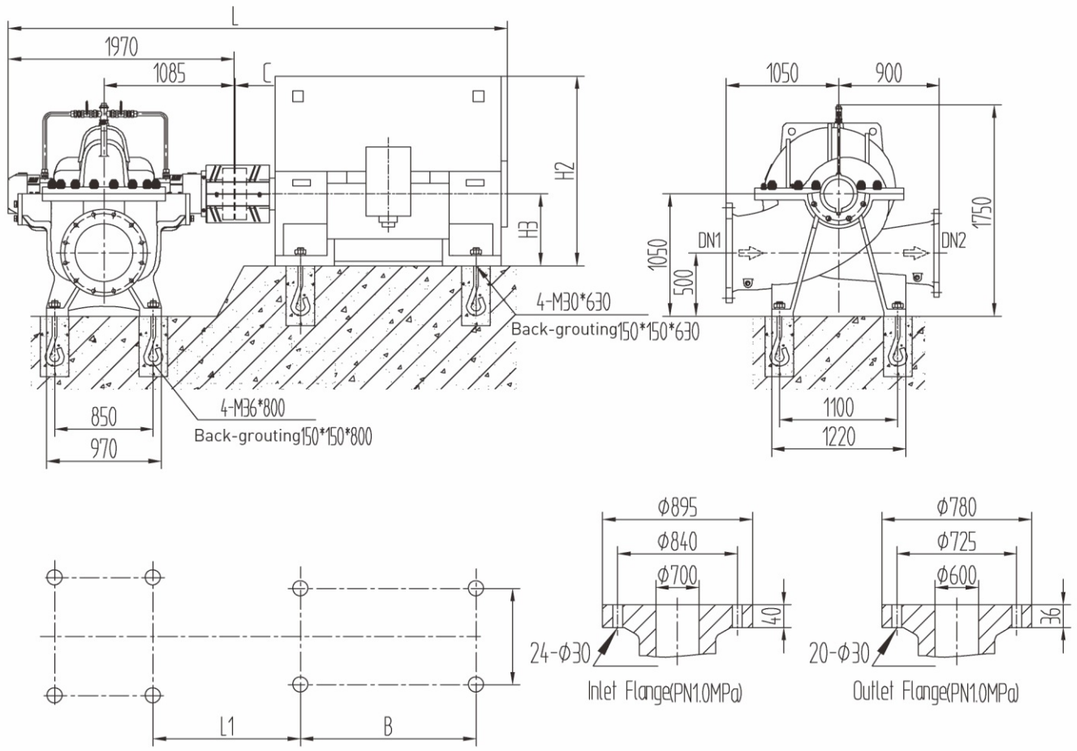

Installation Dimensions Table of Pump										
Pump Type	Motor			Installation Dimensions(mm)						
	Type	Power kW	Volt. V	L	L1	A	B	H2	H3	C
GS700-23(M)/6	Y4501-6	450	6000	4059	1274	800	1120	1350	450	7
	Y4506-6		10000	4129	1234	800	1120	1350	450	7
	Y4005-6	400	6000	3878	1213	710	1000	1200	400	6
	Y4505-6		10000	4128	1233	800	1120	1350	450	6
	Y4004-6	355	6000	3878	1213	710	1000	1200	400	6
	Y4504-6		10000	4128	1233	800	1120	1350	450	6
	Y4003-6	315	6000	3878	1213	710	1000	1200	400	6
	Y4503-6		10000	4128	1233	800	1120	1350	450	6
	Y4002-6	280	6000	3878	1213	710	1000	1200	400	6
	Y4502-6		10000	4128	1233	800	1120	1350	450	6

GS700-27(M)/6 GS700-32(M)/6

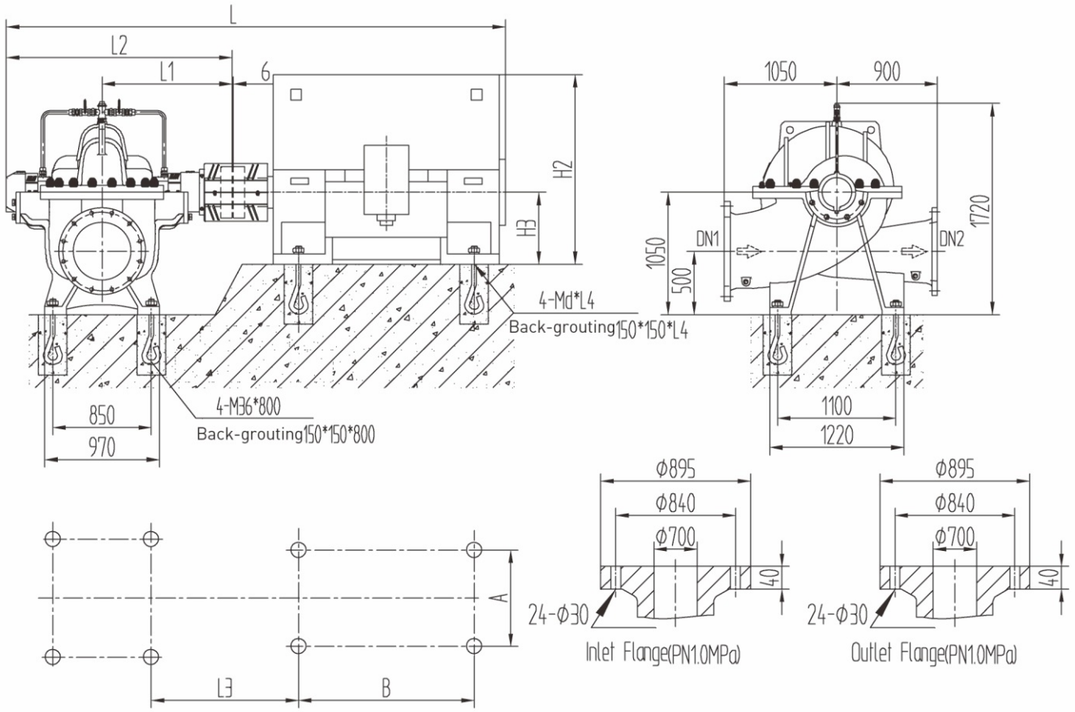

Installation Dimensions Table of Pump

Pump Type	Motor			Installation Dimensions (mm)								
	Type	Power kW	Volt. V	L	L1	L2	L3	A	B	H2	H3	Md×L2
GS700-27(M)/6	Y4005-6	400	6000	3738	1015	1830	1143	710	1000	1200	400	M30×630
	Y4505-6		10000	3988	1015	1830	1163	800	1120	1350	450	M30×630
	Y4004-6	355	6000	3738	1015	1830	1143	710	1000	1200	400	M30×630
	Y4504-6		10000	3988	1015	1830	1163	800	1120	1350	450	M30×630
	Y4003-6	315	6000	3738	1015	1830	1143	710	1000	1200	400	M30×630
	Y4503-6		10000	3988	1015	1830	1163	800	1120	1350	450	M30×630
	Y4002-6	280	6000	3738	1015	1830	1143	710	1000	1200	400	M30×630
	Y4502-6		10000	3988	1015	1830	1163	800	1120	1350	450	M30×630
	Y3556-6	250	6000	3638	1015	1830	1123	630	900	1070	355	M24×500
	Y4501-6		10000	3988	1015	1830	1163	800	1120	1350	450	M30×630
GS700-32(M)/6	Y4004-6	355	6000	3643	965	1735	1093	710	1000	1200	400	M30×630
	Y4504-6		10000	3893	965	1735	1113	800	1120	1350	450	M30×630
	Y4003-6	315	6000	3643	965	1735	1093	710	1000	1200	400	M30×630
	Y4503-6		10000	3893	965	1735	1113	800	1120	1350	450	M30×630
	Y4002-6	280	6000	3643	965	1735	1093	710	1000	1200	400	M30×630
	Y4502-6		10000	3893	965	1735	1113	800	1120	1350	450	M30×630
	Y3556-6	250	6000	3543	965	1735	1073	630	900	1070	355	M24×500
	Y4501-6		10000	3893	965	1735	1113	800	1120	1350	450	M30×630

GS800-9(M)/6

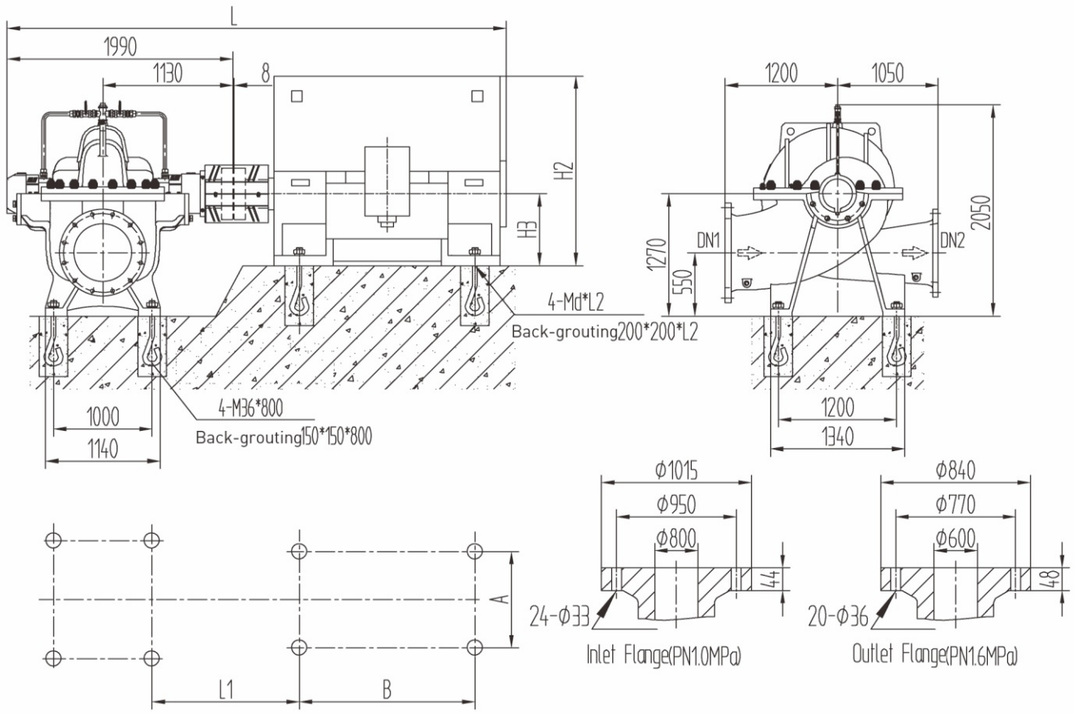

Installation Dimensions Table of Pump

Pump Type	Motor			Installation Dimensions(mm)						
	Type	Power kW	Volt. V	L	L1	A	B	H2	H3	Md×L2
GS800-9(M)/6	Y710-6	2800	6000	5200	1520	1400	1800	2330	710	M48×1000
	Y800-6		10000	5420	1520	1600	2000	2550	800	M48×1000
	Y710-6	2500	6000	5200	1520	1400	1800	2330	710	M48×1000
	Y710-6		10000	5200	1520	1400	1800	2330	710	M48×1000
	Y710-6	2240	6000	5200	1520	1400	1800	2330	710	M48×1000
	Y710-6		10000	5200	1520	1400	1800	2330	710	M48×1000
	Y6303-6	2000	6000	4820	1470	1120	1600	2000	630	M42×800
	Y710-6		10000	5200	1520	1400	1800	2330	710	M48×1000
	Y6302-6	1800	6000	4820	1470	1120	1600	2000	630	M42×800
	Y6303-6		10000	4920	1470	1120	1600	2000	630	M42×800
	Y6301-6	1600	6000	4820	1470	1120	1600	2000	630	M42×800
	Y6302-6		10000	4920	1470	1120	1600	2000	630	M42×800

GS800-13(M)/6

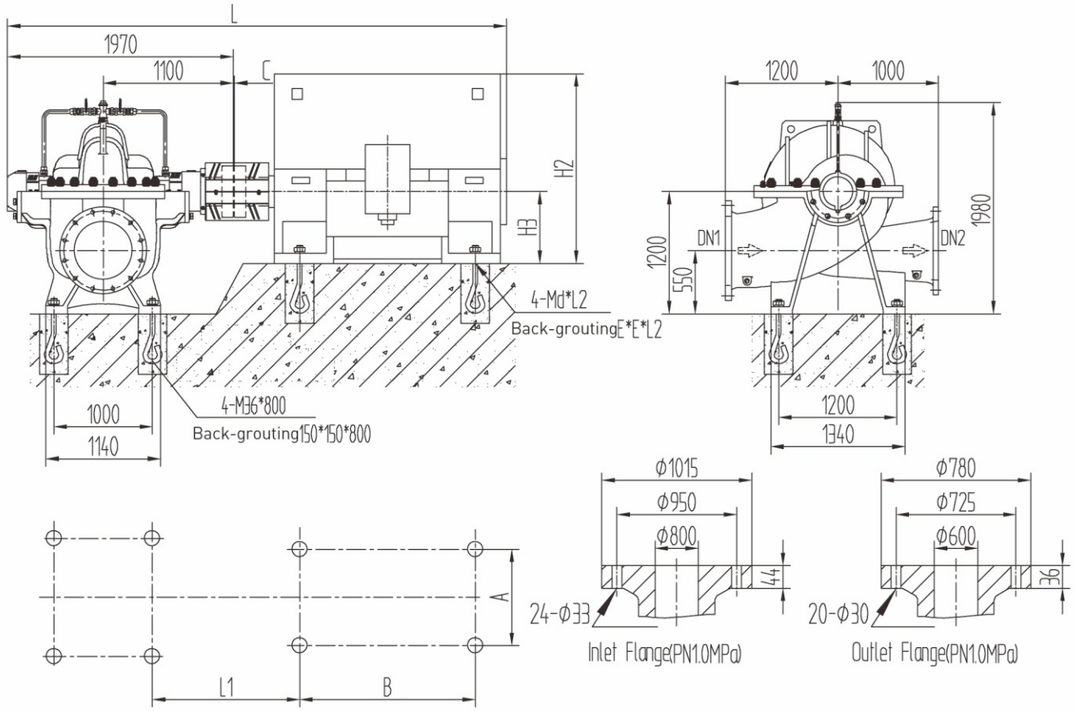

Installation Dimensions Table of Pump

Pump Type	Motor			Installation Dimensions(mm)								
	Type	Power kW	Volt. V	L	L1	A	B	H2	H3	C	E	Md×L2
GS800-13(M)/6	Y6302-6	1800	6000	4800	1440	1120	1600	2000	630	8	200	M42×800
	Y6303-6		10000	4900	1440	1120	1600	2000	630	8	200	M42×800
	Y6301-6	1600	6000	4800	1440	1120	1600	2000	630	8	200	M42×800
	Y6302-6		10000	4900	1440	1120	1600	2000	630	8	200	M42×800
	Y5603-6	1400	6000	4510	1410	1000	1400	1800	560	8	150	M36×800
	Y6301-6		10000	4900	1440	1120	1600	2000	630	8	200	M42×800
	Y5602-6	1250	6000	4509	1409	1000	1400	1800	560	7	150	M36×800
	Y5604-6		10000	4509	1409	1000	1400	1800	560	7	150	M36×800
	Y5603-6	1120	6000	4509	1409	1000	1400	1800	560	7	150	M36×800
	Y5601-6		10000	4509	1409	1000	1400	1800	560	7	150	M36×800
	Y5004-6	1000	6000	4169	1334	900	1250	1520	500	7	150	M36×800
	Y5602-6		10000	4509	1409	1000	1400	1800	560	7	150	M36×800
	Y5003-6	900	6000	4169	1334	900	1250	1520	500	7	150	M36×800
	Y5601-6		10000	4509	1409	1000	1400	1800	560	7	150	M36×800

GS800-19(M)/6 GS800-23(M)/6

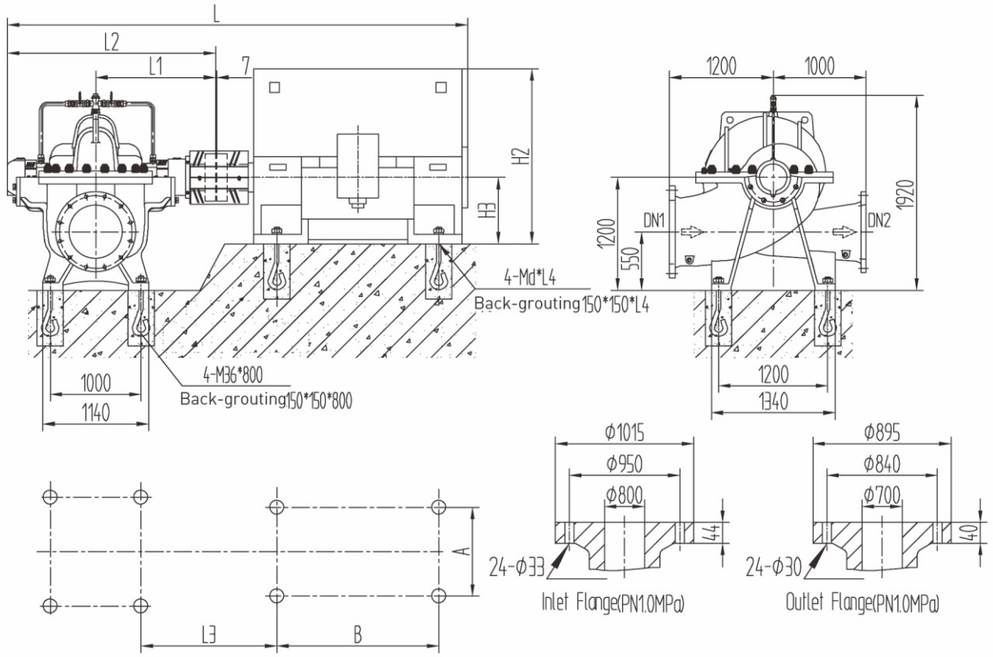

Installation Dimensions Table of Pump

Pump Type	Motor			Installation Dimensions(mm)								
	Type	Power kW	Volt. V	L	L1	L2	L3	A	B	H2	H3	Md×L4
GS800-19(M)/6	Y5601-6	1120	6000	4449	1070	1910	1379	1000	1400	1800	560	M36×800
	Y5603-6		10000	4449	1070	1910	1379	1000	1400	1800	560	M36×800
	Y5003-6	900	6000	4109	1070	1910	1304	900	1250	1520	500	M36×800
	Y5601-6		10000	4449	1070	1910	1379	1000	1400	1800	560	M36×800
	Y5002-6	800	6000	4109	1070	1910	1304	900	1250	1520	500	M36×800
	Y5005-6		10000	4319	1070	1910	1304	900	1250	1520	500	M36×800
	Y5001-6	710	6000	4109	1070	1910	1304	900	1250	1520	500	M36×800
	Y5004-6		10000	4319	1070	1910	1304	900	1250	1520	500	M36×800
	Y4504-6	630	6000	3999	1070	1910	1184	800	1120	1350	450	M30×630
	Y5003-6		10000	4319	1070	1910	1304	900	1250	1520	500	M36×800
	Y4503-6	560	6000	3999	1070	1910	1184	800	1120	1350	450	M30×630
	Y5002-6		10000	4319	1070	1910	1304	900	1250	1520	500	M36×800
GS800-23(M)/6	Y5002-6	800	6000	4214	1125	2015	1359	900	1250	1520	500	M36×800
	Y5005-6		10000	4424	1125	2015	1359	900	1250	1520	500	M36×800
	Y5001-6	710	6000	4214	1125	2015	1359	900	1250	1520	500	M36×800
	Y5004-6		10000	4424	1125	2015	1359	900	1250	1520	500	M36×800
	Y4504-6	630	6000	4104	1125	2015	1239	800	1120	1350	450	M30×630
	Y5003-6		10000	4424	1125	2015	1359	900	1250	1520	500	M36×800
	Y4503-6	560	6000	4104	1125	2015	1239	800	1120	1350	450	M30×630
	Y5002-6		10000	4424	1125	2015	1359	900	1250	1520	500	M36×800
	Y4502-6	500	6000	4104	1125	2015	1239	800	1120	1350	450	M30×630
	Y5001-6		10000	4424	1125	2015	1359	900	1250	1520	500	M36×800

GS800-27(M)/6 GS800-32(M)/6

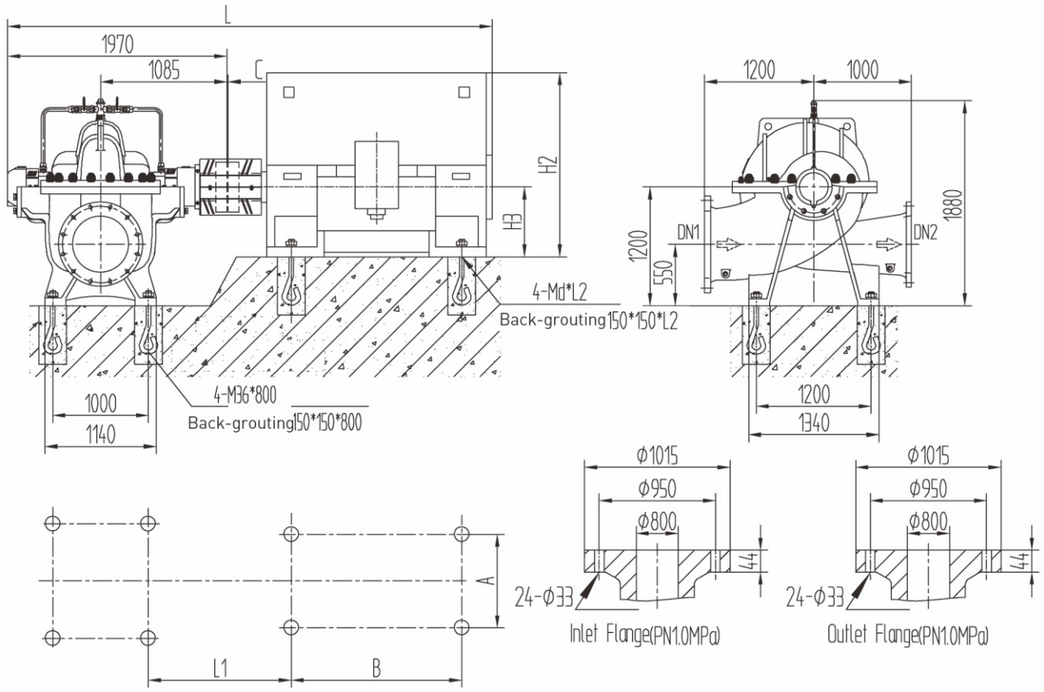

Installation Dimensions Table of Pump

Pump Type	Motor			Installation Dimensions(mm)							
	Type	Power kW	Volt. V	L	L1	A	B	H2	H3	C	Md×L2
GS800-27(M)/6	Y5001-6	710	6000	4169	1319	900	1250	1520	500	7	M36×800
	Y5004-6		10000	4379	1319	900	1250	1520	500	7	M36×800
	Y4504-6	630	6000	4059	1199	800	1120	1350	450	7	M30×630
	Y5003-6		10000	4379	1319	900	1250	1520	500	7	M36×800
	Y4503-6	560	6000	4059	1199	800	1120	1350	450	7	M30×630
	Y5002-6		10000	4379	1319	900	1250	1520	500	7	M36×800
	Y4502-6	500	6000	4059	1199	800	1120	1350	450	7	M30×630
	Y5001-6		10000	4379	1319	900	1250	1520	500	7	M36×800
	Y4501-6	450	6000	4059	1199	800	1120	1350	450	7	M30×630
	Y4506-6		10000	4129	1159	800	1120	1350	450	7	M30×630
	Y4005-6	400	6000	3878	1138	710	1000	1200	400	6	M30×630
	Y4505-6		10000	4128	1158	800	1120	1350	450	6	M30×630
GS800-32(M)/6	Y4503-6	560	6000	4059	1199	800	1120	1350	450	7	M30×630
	Y5002-6		10000	4379	1319	900	1250	1520	500	7	M36×800
	Y4502-6	500	6000	4059	1199	800	1120	1350	450	7	M30×630
	Y5001-6		10000	4379	1319	900	1250	1520	500	7	M36×800
	Y4501-6	450	6000	4059	1199	800	1120	1350	450	7	M30×630
	Y4506-6		10000	4129	1159	800	1120	1350	450	7	M30×630
	Y4005-6	400	6000	3878	1138	710	1000	1200	400	6	M30×630
	Y4505-6		10000	4128	1158	800	1120	1350	450	6	M30×630

GS800-9(M)/8

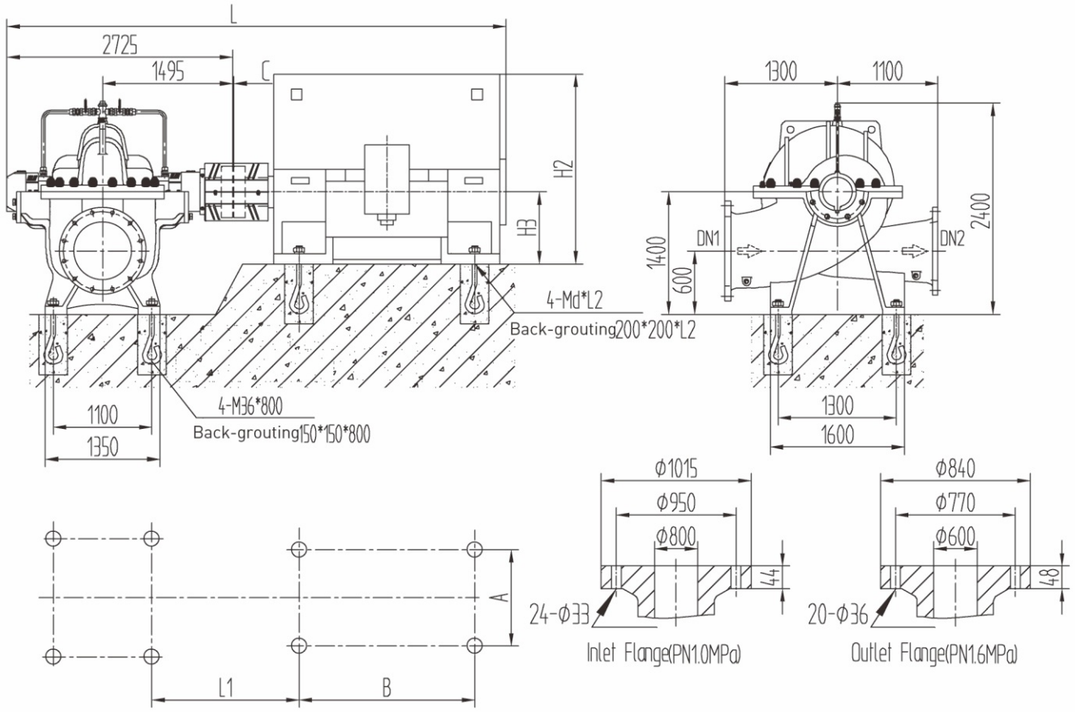

Installation Dimensions Table of Pump

Pump Type	Motor			Installation Dimensions (mm)							
	Type	Power kW	Volt. V	L	L1	A	B	H2	H3	C	Md×L2
GS800-9(M)/8	Y710-8	2240	6000	5935	1835	1400	1800	2330	710	8	M48×1000
	Y800-8		10000	6155	1835	1600	2000	2550	800	8	M48×1000
	Y710-8	1800	6000	5935	1835	1400	1800	2330	710	8	M48×1000
	Y710-8		10000	5935	1835	1400	1800	2330	710	8	M48×1000
	Y6304-8	1600	6000	5555	1785	1120	1600	2000	630	8	M42×800
	Y710-8		10000	5935	1835	1400	1800	2330	710	8	M48×1000
	Y6303-8	1400	6000	5555	1785	1120	1600	2000	630	8	M42×800
	Y710-8		10000	5935	1835	1400	1800	2330	710	8	M48×1000
	Y6302-8	1250	6000	5555	1785	1120	1600	2000	630	8	M42×800
	Y6303-8		10000	5655	1785	1120	1600	2000	630	8	M42×800
	Y5603-8	1000	6000	5264	1754	1000	1400	1800	560	7	M36×800
	Y6301-8		10000	5654	1784	1120	1600	2000	630	7	M42×800

GS800-13(M)/8

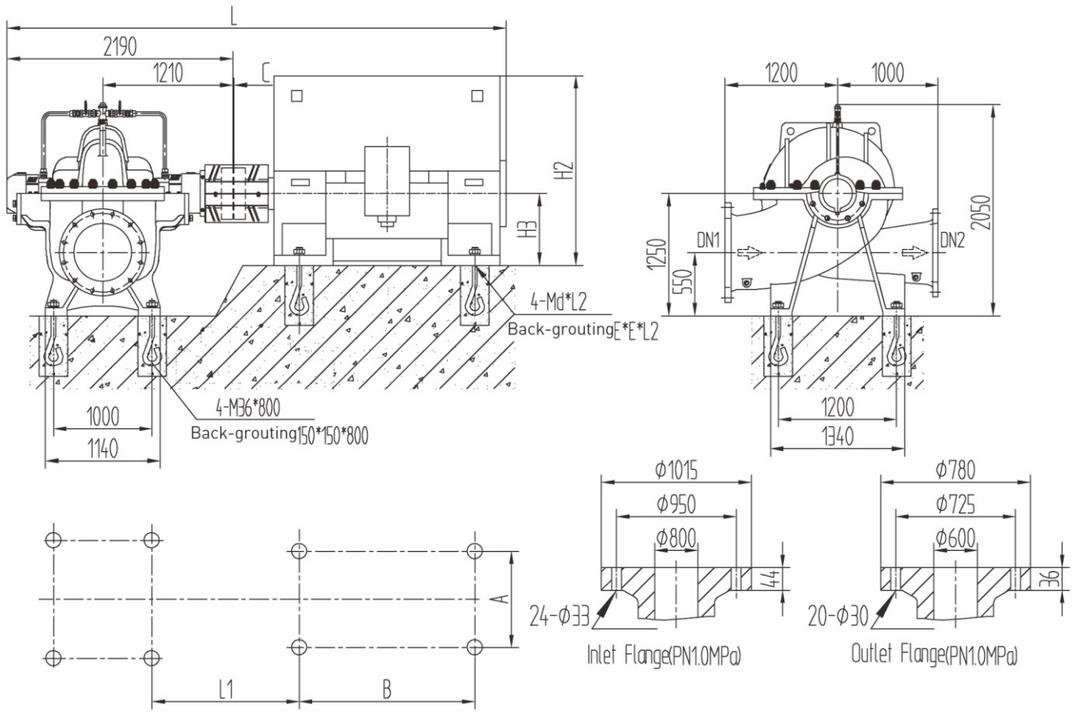

Installation Dimensions Table of Pump

Pump Type	Motor			Installation Dimensions(mm)								
	Type	Power kW	Volt. V	L	L1	A	B	H2	H3	C	E	Md×L2
GS800-13(M)/8	Y6302-8	1250	6000	5020	1550	1120	1600	2000	630	8	200	M42×800
	Y6303-8		10000	5120	1550	1120	1600	2000	630	8	200	M42×800
	Y6301-8	1120	6000	5020	1550	1120	1600	2000	630	8	200	M42×800
	Y6302-8		10000	5120	1550	1120	1600	2000	630	8	200	M42×800
	Y5603-8	1000	6000	4729	1519	1000	1400	1800	560	7	150	M36×800
	Y6301-8		10000	5119	1549	1120	1600	2000	630	7	200	M42×800
	Y5602-8	900	6000	4729	1519	1000	1400	1800	560	7	150	M36×800
	Y5604-8		10000	4729	1519	1000	1400	1800	560	7	150	M36×800
	Y5601-8	800	6000	4729	1519	1000	1400	1800	560	7	150	M36×800
	Y5603-8		10000	4729	1519	1000	1400	1800	560	7	150	M36×800
	Y5004-8	710	6000	4389	1444	900	1250	1520	500	7	150	M36×800
	Y5602-8		10000	4729	1519	1000	1400	1800	560	7	150	M36×800
	Y5003-8	630	6000	4389	1444	900	1250	1520	500	7	150	M36×800
	Y5601-8		10000	4729	1519	1000	1400	1800	560	7	150	M36×800

GS800-19(M)/8 GS800-23(M)/8

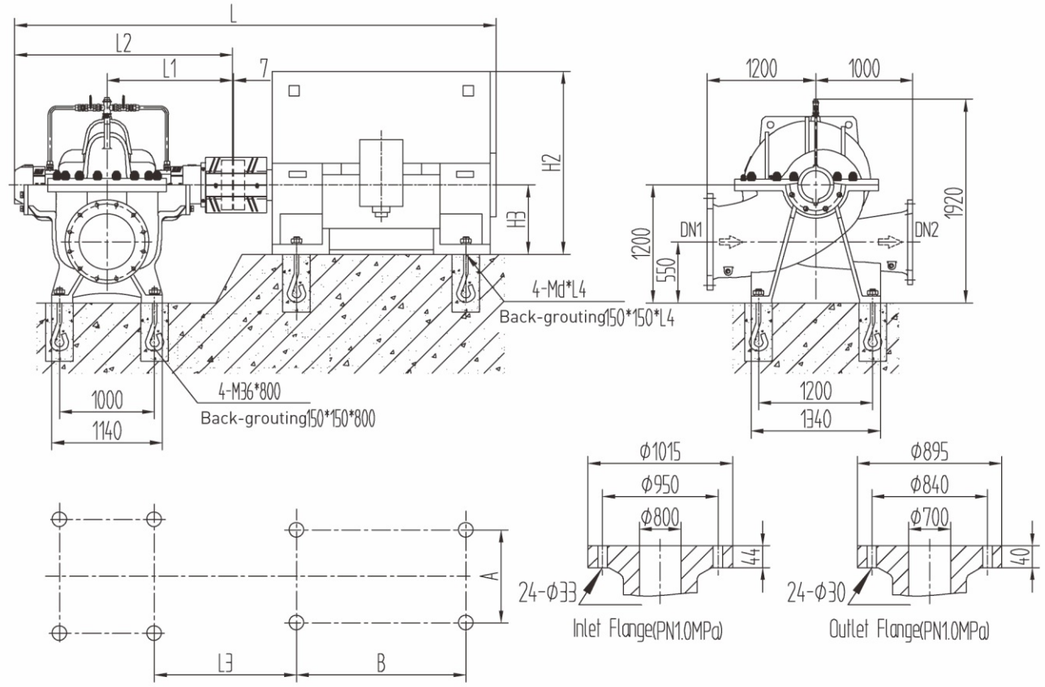

Installation Dimensions Table of Pump

Pump Type	Motor			Installation Dimensions(mm)								
	Type	Power kW	Volt. V	L	L1	L2	L3	A	B	H2	H3	Md×L2
GS800-19(M)/8	Y5601-8	800	6000	4709	1200	2170	1509	1000	1400	1800	560	M36×800
	Y5603-8		10000	4709	1200	2170	1509	1000	1400	1800	560	M36×800
	Y5004-8	710	6000	4369	1200	2170	1434	900	1250	1520	500	M36×800
	Y5602-8		10000	4709	1200	2170	1509	1000	1400	1800	560	M36×800
	Y5003-8	630	6000	4369	1200	2170	1434	900	1250	1520	500	M36×800
	Y5601-8		10000	4709	1200	2170	1509	1000	1400	1800	560	M36×800
	Y5002-8	560	6000	4369	1200	2170	1434	900	1250	1520	500	M36×800
	Y5006-8		10000	4579	1200	2170	1434	900	1250	1520	500	M36×800
	Y5001-8	500	6000	4369	1200	2170	1434	900	1250	1520	500	M36×800
	Y5005-8		10000	4579	1200	2170	1434	900	1250	1520	500	M36×800
	Y4504-8	450	6000	4259	1200	2170	1314	800	1120	1350	450	M30×630
	Y5004-8		10000	4579	1200	2170	1434	900	1250	1520	500	M36×800
GS800-23(M)/8	Y5002-8	560	6000	4214	1125	2015	1359	900	1250	1520	500	M36×800
	Y5006-8		10000	4424	1125	2015	1359	900	1250	1520	500	M36×800
	Y4504-8	450	6000	4104	1125	2015	1239	800	1120	1350	450	M30×630
	Y5004-8		10000	4424	1125	2015	1359	900	1250	1520	500	M36×800
	Y4503-8	400	6000	4104	1125	2015	1239	800	1120	1350	450	M30×630
	Y5003-8		10000	4424	1125	2015	1359	900	1250	1520	500	M36×800
	Y4502-8	355	6000	4104	1125	2015	1239	800	1120	1350	450	M30×630
	Y5002-8		10000	4424	1125	2015	1359	900	1250	1520	500	M36×800

GS900-13(M)/8

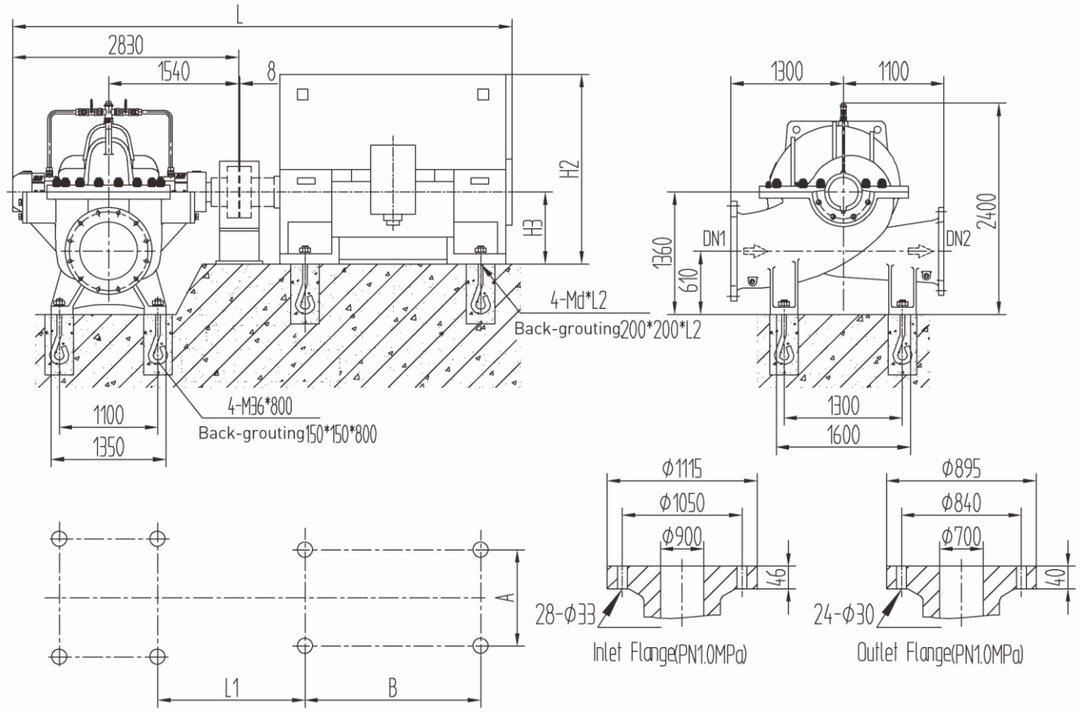

Installation Dimensions Table of Pump											
Pump Type	Motor			Installation Dimensions(mm)							
	Type	Power kW	Volt. V	L	L1	A	B	H2	H3	Md×L2	
GS900-13(M)/8	Y710-8	2240	6000	6040	1880	1400	1800	2330	710	M48×1000	
	Y800-8		10000	6260	1880	1600	2000	2550	800	M48×1000	
	Y710-8	2000	6000	6040	1880	1400	1800	2330	710	M48×1000	
	Y800-8		10000	6260	1880	1600	2000	2550	800	M48×1000	
	Y6304-8	1600	6000	5660	1830	1120	1600	2000	630	M42×800	
	Y710-8		10000	6040	1880	1400	1800	2330	710	M48×1000	
	Y6303-8	1400	6000	5660	1830	1120	1600	2000	630	M42×800	
	Y710-8		10000	6040	1880	1400	1800	2330	710	M48×1000	
	Y6302-8	1250	6000	5660	1830	1120	1600	2000	630	M42×800	
	Y6303-8		10000	5760	1830	1120	1600	2000	630	M42×800	
	Y6301-8	1120	6000	5660	1830	1120	1600	2000	630	M42×800	
	Y6302-8		10000	5760	1830	1120	1600	2000	630	M42×800	

GS900-19(M)/8

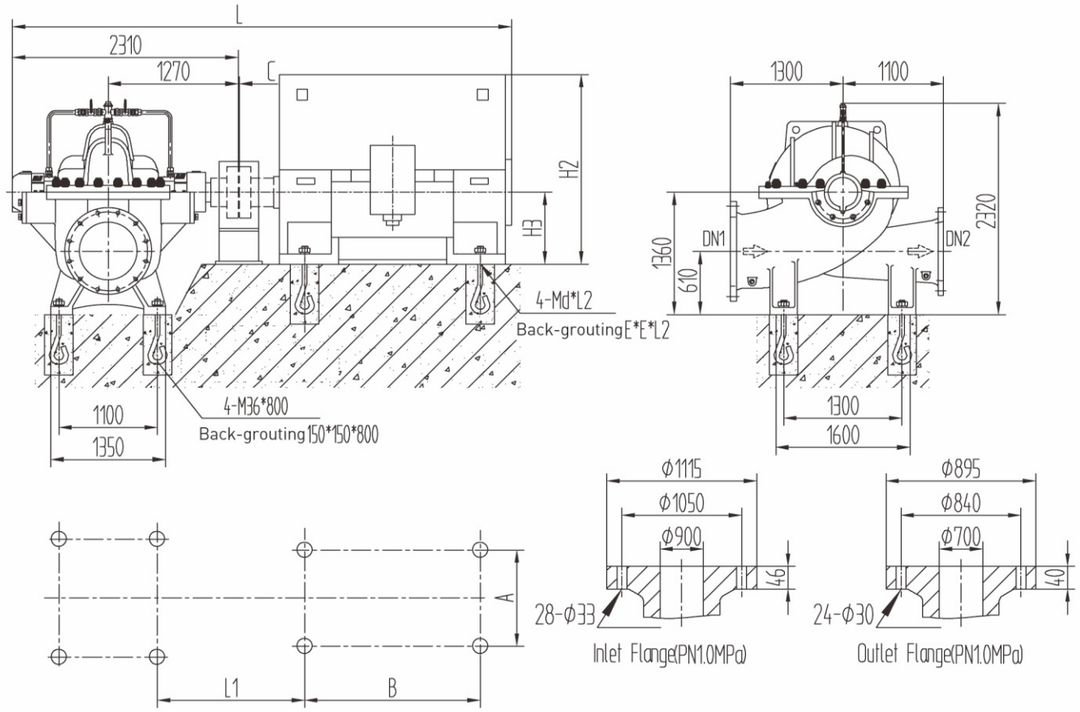

Installation Dimensions Table of Pump													
Pump Type	Motor			Installation Dimensions(mm)									
	Type	Power kW	Volt. V	L	L1	A	B	H2	H3	C	E	Md×L2
GS900-19(M)/8	Y6303-8	1400	6000	5140	1560	1120	1600	2000	630	8	200	M42×800
	Y710-8		10000	5520	1610	1400	1800	2330	710	8	200	M48×1000
	Y6302-8	1250	6000	5140	1560	1120	1600	2000	630	8	200	M42×800
	Y6303-8		10000	5240	1560	1120	1600	2000	630	8	200	M42×800
	Y6301-8	1120	6000	5140	1560	1120	1600	2000	630	8	200	M42×800
	Y6302-8		10000	5240	1560	1120	1600	2000	630	8	200	M42×800
	Y5603-8	1000	6000	4849	1529	1000	1400	1800	560	7	200	M36×800
	Y6301-8		10000	5239	1559	1120	1600	2000	630	7	200	M42×800
	Y5602-8	900	6000	4849	1529	1000	1400	1800	560	7	150	M36×800
	Y5604-8		10000	4849	1529	1000	1400	1800	560	7	150	M36×800
	Y5601-8	800	6000	4849	1529	1000	1400	1800	560	7	150	M36×800
	Y5603-8		10000	4849	1529	1000	1400	1800	560	7	150	M36×800
	Y5004-8	710	6000	4509	1454	900	1250	1520	500	7	150	M36×800
	Y5602-8		10000	4849	1529	1000	1400	1800	560	7	150	M36×800

GS900-23(M)/8 GS900-27(M)/8

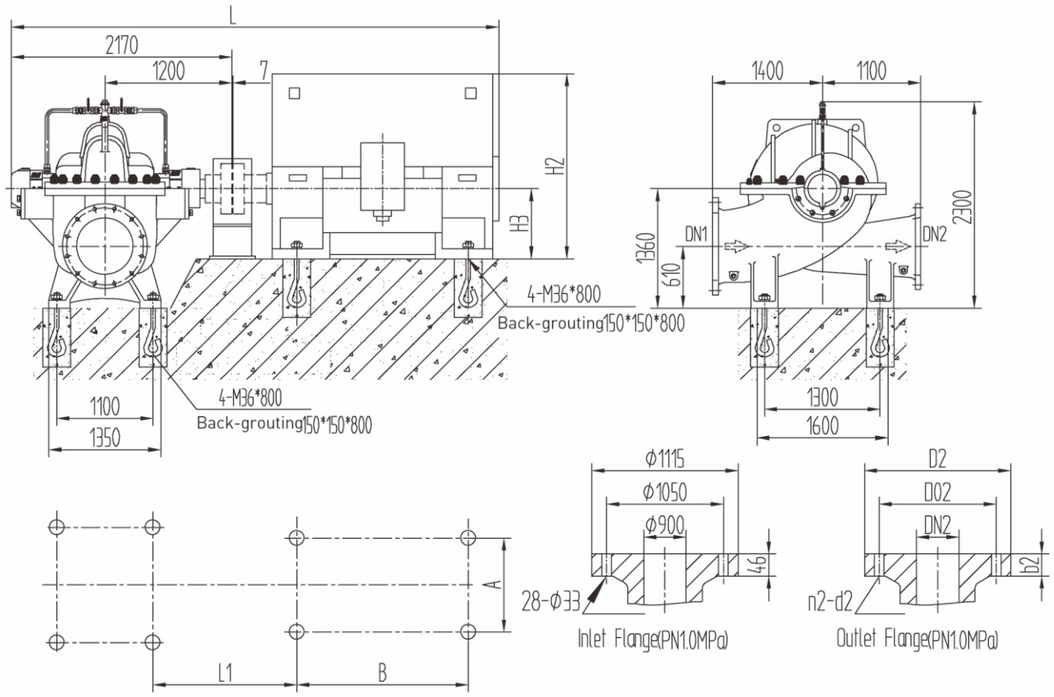

Installation Dimensions Table of Pump

Pump Type	Motor			Installation Dimensions (mm)										
	Type	Power kW	Volt. V	L	L1	A	B	H2	H3	DN2	D02	D2	n2-d2	b2
GS900-23(M)/8	Y5602-8	900	6000	4789	1499	1000	1400	1800	560	800	950	1015	24-Φ33	44
	Y5604-8		10000	4789	1499	1000	1400	1800	560	800	950	1015	24-Φ33	44
	Y5601-8	800	6000	4789	1499	1000	1400	1800	560	800	950	1015	24-Φ33	44
	Y5603-8		10000	4789	1499	1000	1400	1800	560	800	950	1015	24-Φ33	44
	Y5004-8	710	6000	4449	1424	900	1250	1520	500	800	950	1015	24-Φ33	44
	Y5602-8		10000	4789	1499	1000	1400	1800	560	800	950	1015	24-Φ33	44
	Y5003-8	630	6000	4449	1424	900	1250	1520	500	800	950	1015	24-Φ33	44
	Y5601-8		10000	4789	1499	1000	1400	1800	560	800	950	1015	24-Φ33	44
	Y5002-8	560	6000	4449	1424	900	1250	1520	500	800	950	1015	24-Φ33	44
	Y5006-8		10000	4659	1424	900	1250	1520	500	800	950	1015	24-Φ33	44
GS900-27(M)/8	Y5601-8	800	6000	4709	1459	1000	1400	1800	560	900	1050	1115	28-Φ33	46
	Y5603-8		10000	4709	1459	1000	1400	1800	560	900	1050	1115	28-Φ33	46
	Y5004-8	710	6000	4369	1384	900	1250	1520	500	900	1050	1115	28-Φ33	46
	Y5602-8		10000	4709	1459	1000	1400	1800	560	900	1050	1115	28-Φ33	46
	Y5003-8	630	6000	4369	1384	900	1250	1520	500	900	1050	1115	28-Φ33	46
	Y5601-8		10000	4709	1459	1000	1400	1800	560	900	1050	1115	28-Φ33	46
	Y5002-8	560	6000	4369	1384	900	1250	1520	500	900	1050	1115	28-Φ33	46
	Y5006-8		10000	4579	1384	900	1250	1520	500	900	1050	1115	28-Φ33	46
	Y5001-8	500	6000	4369	1384	900	1250	1520	500	900	1050	1115	28-Φ33	46
	Y5005-8		10000	4579	1384	900	1250	1520	500	900	1050	1115	28-Φ33	46

GS1000-13(M)/10

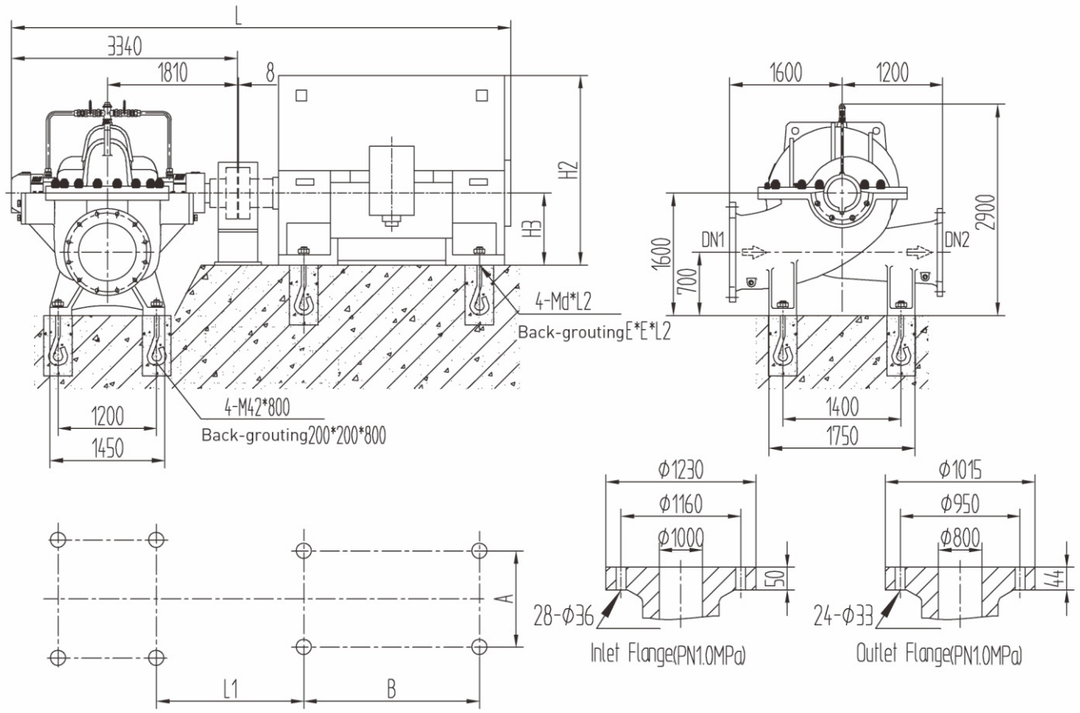

Installation Dimensions Table of Pump

Pump Type	Motor			Installation Dimensions (mm)							
	Type	Power kW	Volt. V	L	L1	A	B	H2	H3	E	Md×L2
GS1000-13(M)/10	Y900-10	3150	6000	7200	2230	1800	2240	2900	900	250	M56×1120
	Y1000-10		10000	7520	2290	2000	2500	3150	1000	250	M56×1120
	Y800-10	2800	6000	6770	2100	1600	2000	2550	800	200	M48×1000
	Y900-10		10000	7200	2230	1800	2240	2900	900	250	M56×1120
	Y800-10	2500	6000	6770	2100	1600	2000	2550	800	200	M48×1000
	Y900-10		10000	7200	2230	1800	2240	2900	900	200	M56×1120
	Y800-10	2240	6000	6770	2100	1600	2000	2550	800	200	M48×1000
	Y800-10		10000	6770	2100	1600	2000	2550	800	200	M48×1000
	Y710-10	2000	6000	6550	2100	1400	1800	2330	710	200	M48×1000
	Y800-10		10000	6770	2100	1600	2000	2550	800	200	M48×1000
	Y710-10	1800	6000	6550	2100	1400	1800	2330	710	200	M48×1000
	Y800-10		10000	6770	2100	1600	2000	2550	800	200	M48×1000
	Y710-10	1600	6000	6550	2100	1400	1800	2330	710	200	M48×1000
	Y710-10		10000	6550	2100	1400	1800	2330	710	200	M48×1000

GS1000-19(M)/10

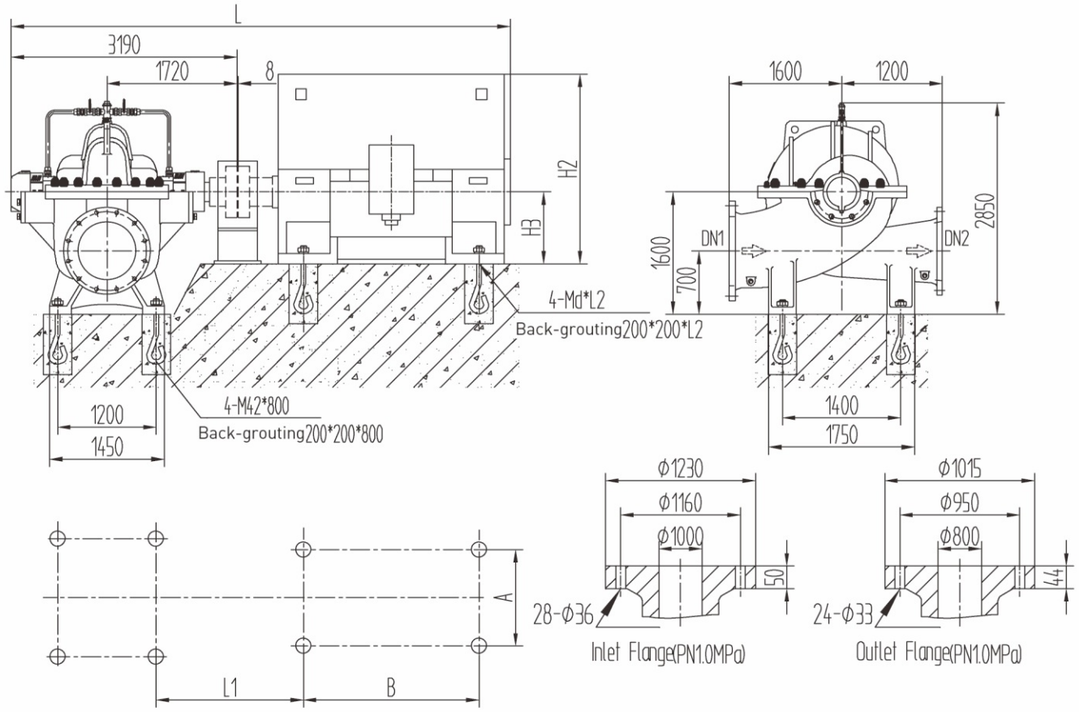

GS1000-23(M)/10 GS1000-27(M)/10

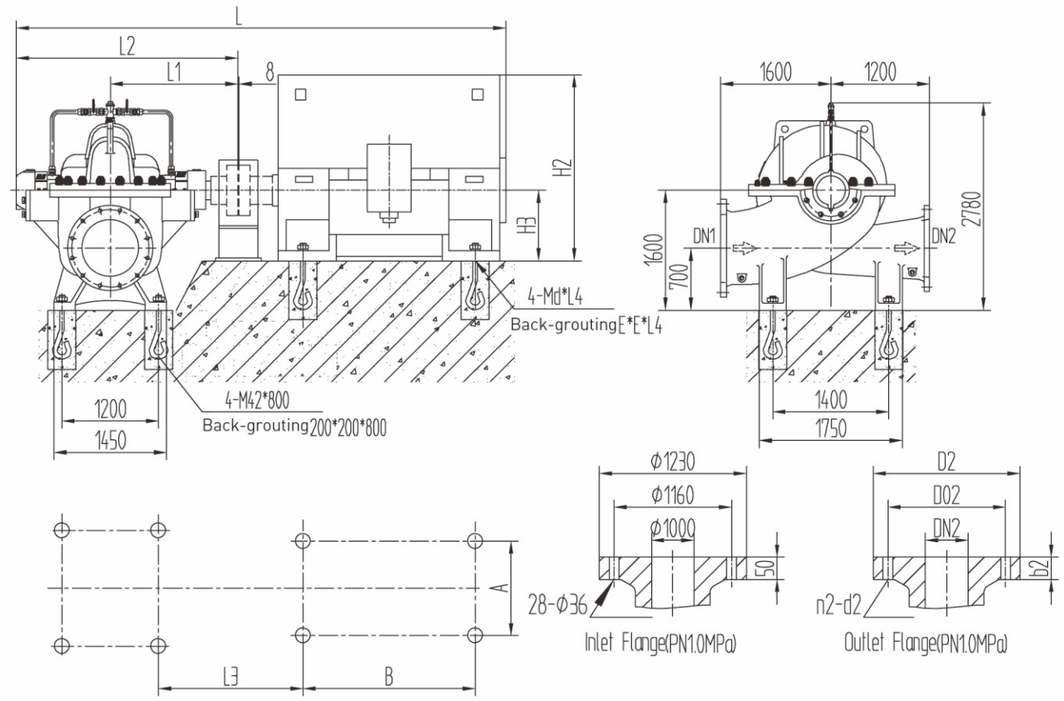

Installation Dimensions Table of Pump

Pump Type	Motor			Installation Dimensions (mm)						
	Type	Power kW	Volt. V	L	L1	A	B	H2	H3	Md×L2
GS1000-19(M)/10	Y710-10	1800	6000	6400	2010	1400	1800	2330	710	M48×1000
	Y800-10		10000	6620	2010	1600	2000	2550	800	M48×1000
	Y710-10	1600	6000	6400	2010	1400	1800	2330	710	M48×1000
	Y710-10		10000	6400	2010	1400	1800	2330	710	M48×1000
	Y6304-10	1400	6000	6020	1960	1120	1600	2000	630	M42×800
	Y710-10		10000	6400	2010	1400	1800	2330	710	M48×1000
	Y6303-10	1250	6000	6020	1960	1120	1600	2000	630	M42×800
	Y710-10		10000	6400	2010	1400	1800	2330	710	M48×1000
	Y6302-10	1120	6000	6020	1960	1120	1600	2000	630	M42×800
	Y6304-10		10000	6020	1960	1120	1600	2000	630	M42×800
	Y6301-10	1000	6000	6020	1960	1120	1600	2000	630	M42×800
	Y6303-10		10000	6020	1960	1120	1600	2000	630	M42×800

Installation Dimensions Table of Pump

Pump Type	Motor			Installation Dimensions (mm)															
	Type	Power kW	Volt. V	L	L1	L2	L3	A	B	H2	H3	C	E	Md×L4	DN2	DO2	D2	n2-d2	b2
GS1000-23(M)/10	Y6304-10	1400	6000	5860	1640	3030	1880	1120	1600	2000	630	8	200	M42×800	900	1050	1115	28-Φ33	46
	Y710-10		10000	6240	1640	3030	1930	1400	1800	2330	710	8	200	M48×1000	900	1050	1115	28-Φ33	46
	Y6302-10	1120	6000	5860	1640	3030	1880	1120	1600	2000	630	8	200	M42×800	900	1050	1115	28-Φ33	46
	Y6304-10		10000	5860	1640	3030	1880	1120	1600	2000	630	8	200	M42×800	900	1050	1115	28-Φ33	46
	Y6301-10	1000	6000	5860	1640	3030	1880	1120	1600	2000	630	8	200	M42×800	900	1050	1115	28-Φ33	46
	Y6303-10		10000	5860	1640	3030	1880	1120	1600	2000	630	8	200	M42×800	900	1050	1115	28-Φ33	46
	Y5603-10	900	6000	5570	1640	3030	1850	1000	1400	1800	560	8	150	M36×800	900	1050	1115	28-Φ33	46
	Y6302-10		10000	5860	1640	3030	1880	1120	1600	2000	630	8	200	M42×800	900	1050	1115	28-Φ33	46
	Y5602-10	800	6000	5569	1640	3030	1849	1000	1400	1800	560	7	150	M36×800	900	1050	1115	28-Φ33	46
	Y6301-10		10000	5859	1640	3030	1879	1120	1600	2000	630	7	200	M42×800	900	1050	1115	28-Φ33	46
GS1000-27(M)/10	Y6301-10	1000	6000	5460	1450	2630	1690	1120	1600	2000	630	8	200	M42×800	1000	1160	1230	28-Φ36	50
	Y6303-10		10000	5460	1450	2630	1690	1120	1600	2000	630	8	200	M42×800	1000	1160	1230	28-Φ36	50
	Y5603-10	900	6000	5170	1450	2630	1660	1000	1400	1800	560	8	150	M36×800	1000	1160	1230	28-Φ36	50
	Y6302-10		10000	5460	1450	2630	1690	1120	1600	2000	630	8	200	M42×800	1000	1160	1230	28-Φ36	50
	Y5602-10	800	6000	5169	1450	2630	1659	1000	1400	1800	560	7	150	M36×800	1000	1160	1230	28-Φ36	50
	Y6301-10		10000	5459	1450	2630	1689	1120	1600	2000	630	7	200	M42×800	1000	1160	1230	28-Φ36	50
	Y5601-10	710	6000	5169	1450	2630	1659	1000	1400	1800	560	7	150	M36×800	1000	1160	1230	28-Φ36	50
	Y5605-10		10000	5169	1450	2630	1659	1000	1400	1800	560	7	150	M36×800	1000	1160	1230	28-Φ36	50
	Y5005-10	630	6000	4829	1450	2630	1584	900	1250	1520	500	7	150	M36×800	1000	1160	1230	28-Φ36	50
	Y5604-10		10000	5169	1450	2630	1659	1000	1400	1800	560	7	150	M36×800	1000	1160	1230	28-Φ36	50

GS1200-13(M)/12 GS1200-19(M)/12

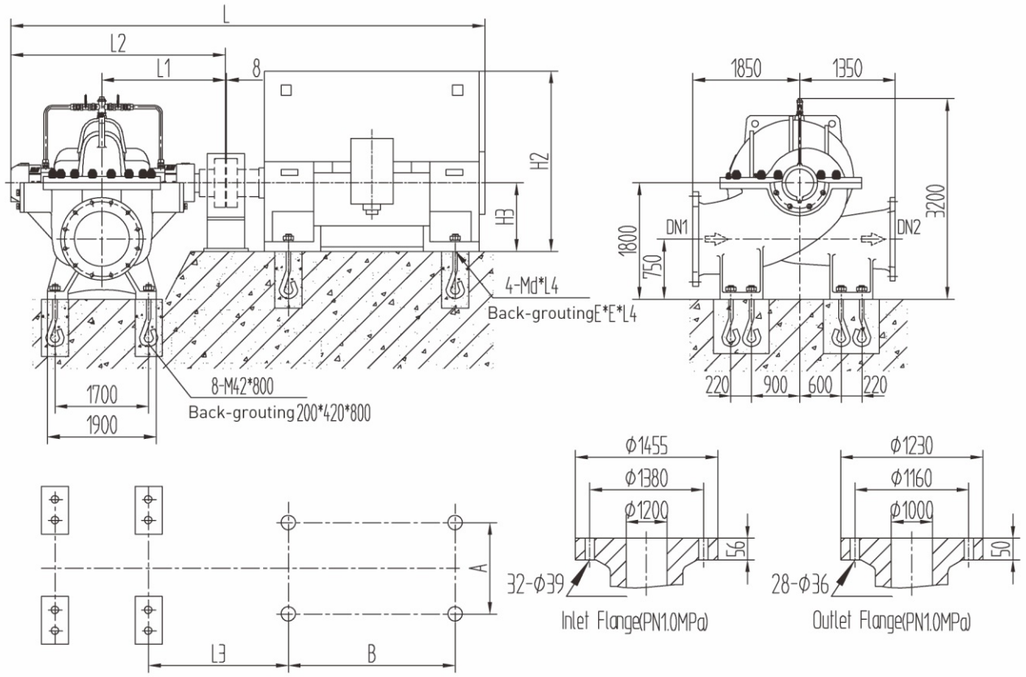

GS1200-23(M)/12 GS1200-27(M)/12

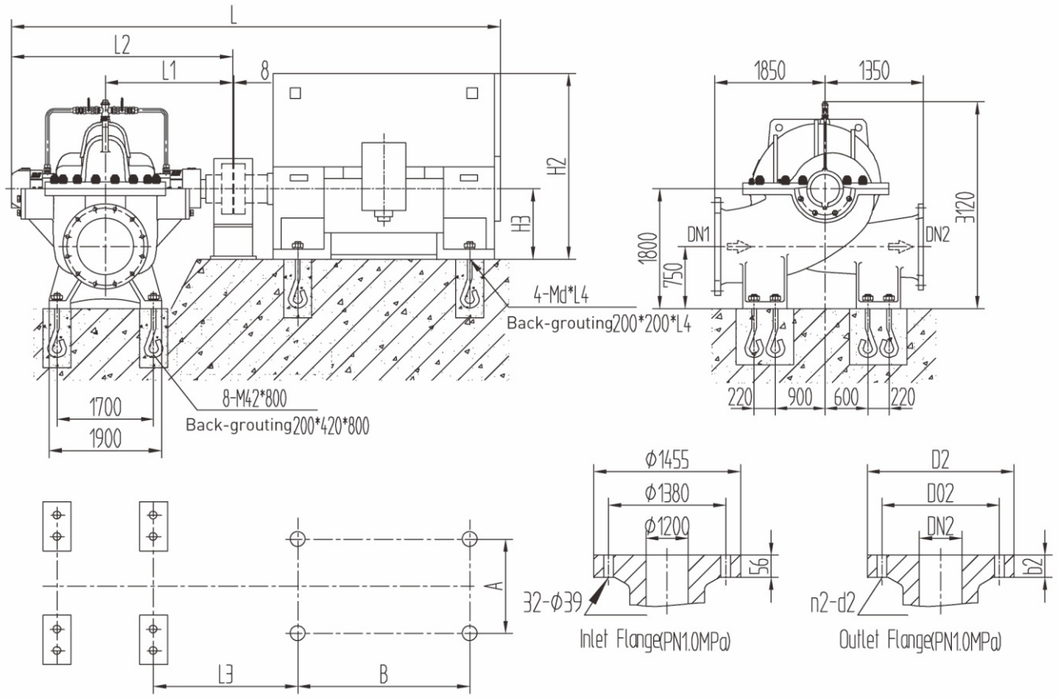

Installation Dimensions Table of Pump

Pump Type	Motor			Installation Dimensions(mm)									
	Type	Power kW	Volt. V	L	L1	L2	L3	A	B	H2	H3	E	Md×L4
GS1200-13(M)/12	Y1000-12	3550	6000	7870	2000	3690	2230	2000	2500	3150	1000	250	M56×1120
	Y1000-12		10000	7870	2000	3690	2230	2000	2500	3150	1000	250	M56×1120
	Y900-12	3150	6000	7550	2000	3690	2170	1800	2240	2900	900	250	M56×1120
	Y1000-12		10000	7870	2000	3690	2230	2000	2500	3150	1000	250	M56×1120
	Y900-12	2800	6000	7550	2000	3690	2170	1800	2240	2900	900	250	M56×1120
	Y1000-12		10000	7870	2000	3690	2230	2000	2500	3150	1000	250	M56×1120
	Y900-12	2500	6000	7550	2000	3690	2170	1800	2240	2900	900	250	M56×1120
	Y1000-12		10000	7870	2000	3690	2230	2000	2500	3150	1000	250	M56×1120
	Y800-12	2240	6000	7120	2000	3690	2040	1600	2000	2550	800	200	M48×1000
	Y900-12		10000	7550	2000	3690	2170	1800	2240	2900	900	250	M56×1120
	Y800-12	2000	6000	7120	2000	3690	2040	1600	2000	2550	800	200	M48×1000
	Y900-12		10000	7550	2000	3690	2170	1800	2240	2900	900	250	M56×1120
GS1200-19(M)/12	Y800-12	2000	6000	7010	1930	3580	1970	1600	2000	2550	800	200	M48×1000
	Y900-12		10000	7440	1930	3580	2100	1800	2240	2900	900	250	M56×1120
	Y800-12	1800	6000	7010	1930	3580	1970	1600	2000	2550	800	200	M48×1000
	Y900-12		10000	7440	1930	3580	2100	1800	2240	2900	900	250	M56×1120
	Y800-12	1600	6000	7010	1930	3580	1970	1600	2000	2550	800	200	M48×1000
	Y800-12		10000	7010	1930	3580	1970	1600	2000	2550	800	200	M48×1000
	Y710-12	1400	6000	6790	1930	3580	1970	1400	1800	2330	710	200	M48×1000
	Y800-12		10000	7010	1930	3580	1970	1600	2000	2550	800	200	M48×1000
	Y710-12	1250	6000	6790	1930	3580	1970	1400	1800	2330	710	200	M48×1000
	Y800-12		10000	7010	1930	3580	1970	1600	2000	2550	800	200	M48×1000
	Y710-12	1120	6000	6790	1930	3580	1970	1400	1800	2330	710	200	M48×1000
	Y710-12		10000	6790	1930	3580	1970	1400	1800	2330	710	200	M48×1000

Installation Dimensions Table of Pump

Pump Type	Motor			Installation Dimensions(mm)													
	Type	Power kW	Volt. V	L	L1	L2	L3	A	B	H2	H3	Md×L4	DN2	D02	D2	n2-d2	b2
GS1200-23(M)/12	Y800-12	1600	6000	6860	1840	3430	1880	1600	2000	2550	800	M48×1000	1100	1210	1340	32-Φ36	52
	Y800-12		10000	6860	1840	3430	1880	1600	2000	2550	800	M48×1000	1100	1210	1340	32-Φ36	52
	Y710-12	1400	6000	6640	1840	3430	1880	1400	1800	2330	710	M48×1000	1100	1210	1340	32-Φ36	52
	Y800-12		10000	6860	1840	3430	1880	1600	2000	2550	800	M48×1000	1100	1210	1340	32-Φ36	52
	Y710-12	1250	6000	6640	1840	3430	1880	1400	1800	2330	710	M48×1000	1100	1210	1340	32-Φ36	52
	Y800-12		10000	6860	1840	3430	1880	1600	2000	2550	800	M48×1000	1100	1210	1340	32-Φ36	52
	Y710-12	1120	6000	6640	1840	3430	1880	1400	1800	2330	710	M48×1000	1100	1210	1340	32-Φ36	52
	Y710-12		10000	6640	1840	3430	1880	1400	1800	2330	710	M48×1000	1100	1210	1340	32-Φ36	52
	Y6304-12	1000	6000	6260	1840	3430	1830	1120	1600	2000	630	M42×800	1100	1210	1340	32-Φ36	52
	Y710-12		10000	6640	1840	3430	1880	1400	1800	2330	710	M48×1000	1100	1210	1340	32-Φ36	52
GS1200-27(M)/12	Y710-12	1250	6000	6540	1790	3330	1830	1400	1800	2330	710	M48×1000	1200	1380	1455	32-Φ39	56
	Y800-12		10000	6760	1790	3330	1830	1600	2000	2550	800	M48×1000	1200	1380	1455	32-Φ39	56
	Y710-12	1120	6000	6540	1790	3330	1830	1400	1800	2330	710	M48×1000	1200	1380	1455	32-Φ39	56
	Y710-12		10000	6540	1790	3330	1830	1400	1800	2330	710	M48×1000	1200	1380	1455	32-Φ39	56
	Y6304-12	1000	6000	6160	1790	3330	1780	1120	1600	2000	630	M42×800	1200	1380	1455	32-Φ39	56
	Y710-12		10000	6540	1790	3330	1830	1400	1800	2330	710	M48×1000	1200	1380	1455	32-Φ39	56
	Y6303-12	900	6000	6160	1790	3330	1780	1120	1600	2000	630	M42×800	1200	1380	1455	32-Φ39	56
	Y710-12		10000	6540	1790	3330	1830	1400	1800	2330	710	M48×1000	1200	1380	1455	32-Φ39	56
	Y6302-12	800	6000	6160	1790	3330	1780	1120	1600	2000	630	M42×800	1200	1380	1455	32-Φ39	56
	Y6304-12		10000	6160	1790	3330	1780	1400	1600	2000	630	M48×800	1200	1380	1455	32-Φ39	56

GS1400-19(M)/14 GS1400-23(M)/14

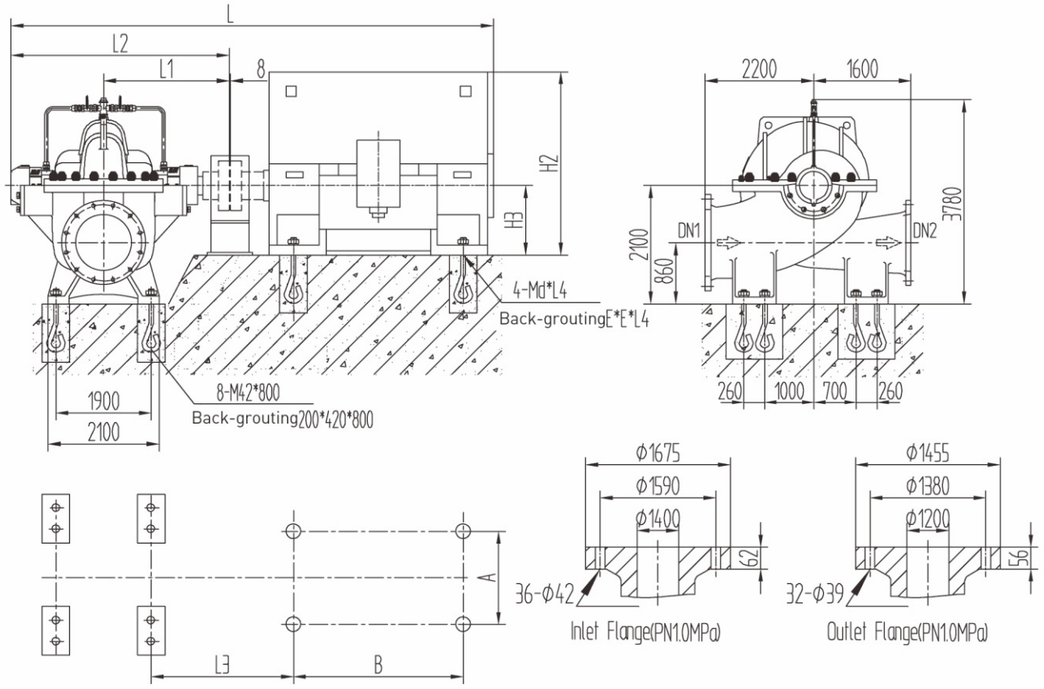

Installation Dimensions Table of Pump														
Pump Type	Motor			Installation Dimensions(mm)										
	Type	Power kW	Volt. V	L	L1	L2	L3	A	B	H2	H3	E	Md×L4
GS1400-19(M)/14	Y900-14	2800	6000	7850	2150	3990	2220	1800	2240	2900	900	250	M56×1120
	Y1000-14		10000	8170	2150	3990	2280	2000	2500	3150	1000	250	M56×1120
	Y900-14	2500	6000	7850	2150	3990	2220	1800	2240	2900	900	250	M56×1120
	Y1000-14		10000	8170	2150	3990	2280	2000	2500	3150	1000	250	M56×1120
	Y900-14	2240	6000	7850	2150	3990	2220	1800	2240	2900	900	250	M56×1120
	Y900-14		10000	7850	2150	3990	2220	1800	2240	2900	900	250	M56×1120
	Y900-14	2000	6000	7850	2150	3990	2220	1800	2240	2900	900	250	M56×1120
	Y900-14		10000	7850	2150	3990	2220	1800	2240	2900	900	250	M56×1120
	Y800-14	1800	6000	7420	2150	3990	2090	1600	2000	2550	800	200	M48×1000
	Y900-14		10000	7850	2150	3990	2220	1800	2240	2900	900	250	M56×1120
	Y800-14	1600	6000	7420	2150	3990	2090	1600	2000	2550	800	200	M48×1000
	Y800-14		10000	7420	2150	3990	2090	1600	2000	2550	800	200	M48×1000
GS1400-23(M)/14	Y900-14	2240	6000	7700	2060	3840	2130	1800	2240	2900	900	250	M56×1120
	Y900-14		10000	7700	2060	3840	2130	1800	2240	2900	900	250	M56×1120
	Y900-14	2000	6000	7700	2060	3840	2130	1800	2240	2900	900	250	M56×1120
	Y900-14		10000	7700	2060	3840	2130	1800	2240	2900	900	250	M56×1120
	Y800-14	1800	6000	7270	2060	3840	2000	1600	2000	2550	800	200	M48×1000
	Y900-14		10000	7700	2060	3840	2130	1800	2240	2900	900	250	M56×1120
	Y800-14	1600	6000	7270	2060	3840	2000	1600	2000	2550	800	200	M48×1000
	Y800-14		10000	7270	2060	3840	2000	1600	2000	2550	800	200	M48×1000
	Y800-14	1400	6000	7270	2060	3840	2000	1600	2000	2550	800	200	M48×1000
	Y800-14		10000	7270	2060	3840	2000	1600	2000	2550	800	200	M48×1000

GS1400-27(M)/14

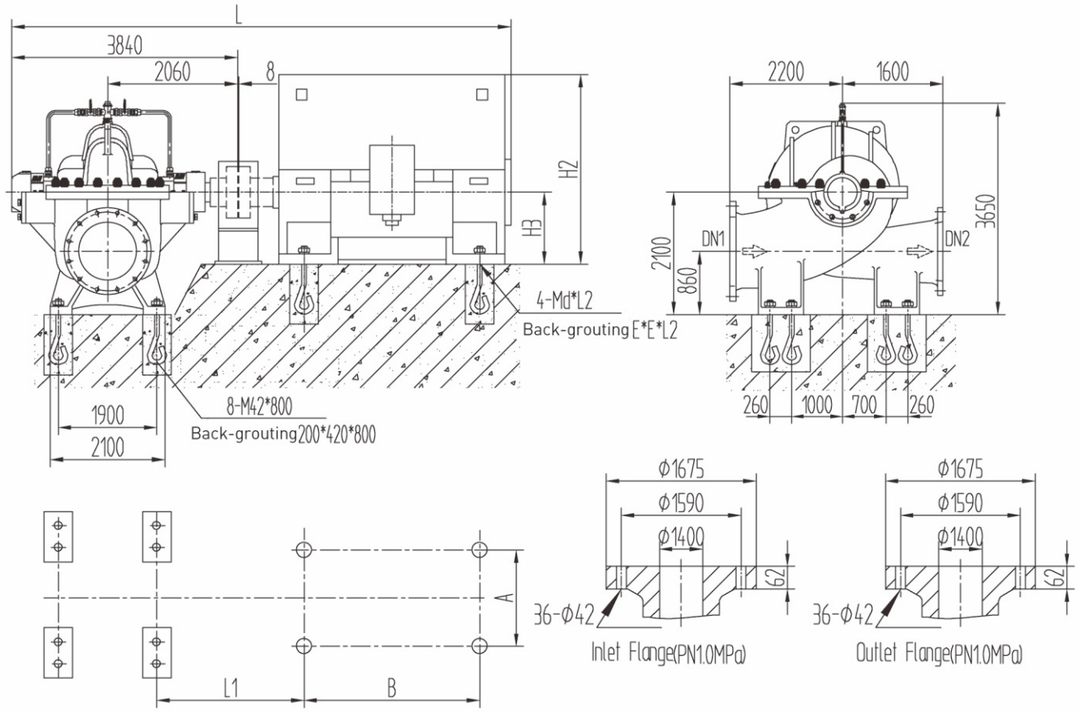

Installation Dimensions Table of Pump											
Pump Type	Motor			Installation Dimensions (mm)							
	Type	Power kW	Volt. V	L	L1	A	B	H2	H3	E	Md×L4
GS1400-27(M)/14	Y800-14	1800	6000	7270	2000	1600	2000	2550	800	200	M48×1000
	Y900-14		10000	7700	2130	1800	2240	2900	900	250	M56×1120
	Y800-14	1600	6000	7270	2000	1600	2000	2550	800	200	M48×1000
	Y800-14		10000	7270	2000	1600	2000	2550	800	200	M48×1000
	Y800-14	1400	6000	7270	2000	1600	2000	2550	800	200	M48×1000
	Y800-14		10000	7270	2000	1600	2000	2550	800	200	M48×1000
	Y800-14	1250	6000	7270	2000	1600	2000	2550	800	200	M48×1000
	Y800-14		10000	7270	2000	1600	2000	2550	800	200	M48×1000
	Y710-14	1120	6000	7050	2000	1400	1800	2330	710	200	M48×1000
	Y800-14		10000	7270	2000	1600	2000	2550	800	200	M48×1000

GS1600-19(M)/16 GS1600-23(M)/16 GS1600-27(M)/16

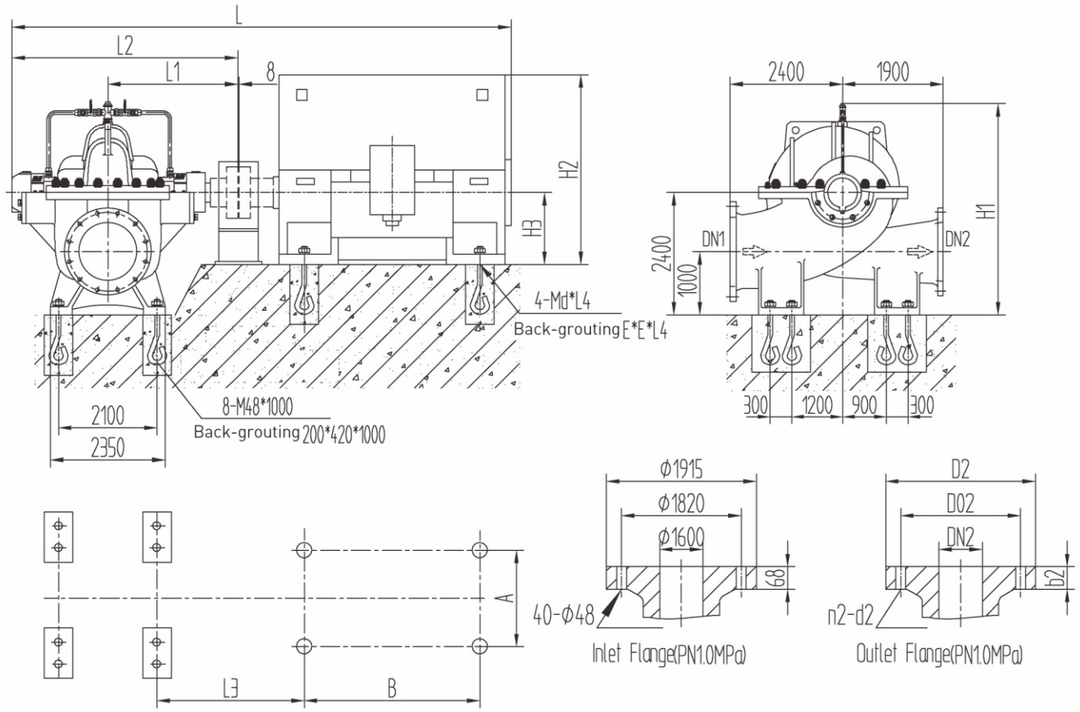

Installation Dimensions Table of Pump

Pump Type	Motor			Installation Dimensions (mm)															
	Type	Power kW	Volt. V	L	L1	L2	L3	A	B	H1	H2	H3	E	Md×L4	DN2	D02	D2	n2-d2	b2
GS1600-19(M)/16	Y1000-16	2240～3550	6000	8610	2350	4430	2330	2000	2500	4200	3150	1000	250	M56×1120	1400	1590	1675	36-Φ42	62
	Y900-16	2000	6000	8290	2350	4430	2270	1800	2240	4200	2900	900	250	M56×1120	1400	1590	1675	36-Φ42	62
	Y1000-16	2000～3550	10000	8610	2350	4430	2330	2000	2500	4200	3150	1000	250	M56×1120	1400	1590	1675	36-Φ42	62
GS1600-23(M)/16	Y1000-16	2240～2800	6000	8410	2270	4230	2250	2000	2500	4100	3150	1000	250	M56×1120	1400	1590	1675	36-Φ42	62
	Y900-16	1800～2000	6000	8090	2270	4230	2190	1800	2240	4100	2900	900	250	M56×1120	1400	1590	1675	36-Φ42	62
	Y1000-16	2000～2800	10000	8410	2270	4230	2250	2000	2500	4100	3150	1000	250	M56×1120	1400	1590	1675	36-Φ42	62
	Y900-16	1800	10000	8090	2270	4230	2190	1800	2240	4100	2900	900	250	M56×1120	1400	1590	1675	36-Φ42	62
GS1600-27(M)/16	Y1000-16	2240	6000	8410	2270	4230	2250	2000	2500	4000	3150	1000	250	M56×1120	1600	1820	1915	40-Φ48	68
	Y900-16	1600～2000	6000	8090	2270	4230	2190	1800	2240	4000	2900	900	250	M56×1120	1600	1820	1915	40-Φ48	68
	Y800-16	1400	6000	7660	2270	4230	2060	1600	2000	4000	2550	800	200	M48×1000	1600	1820	1915	40-Φ48	68
	Y1000-16	2000～2240	10000	8410	2270	4230	2250	2000	2500	4000	3150	1000	250	M56×1120	1600	1820	1915	40-Φ48	68
	Y900-16	1400～1800	10000	8090	2270	4230	2190	1800	2240	4000	2900	900	250	M56×1120	1600	1820	1915	40-Φ48	68

GS1800-19(M)/16 GS1800-23(M)/16 GS1800-27(M)/16

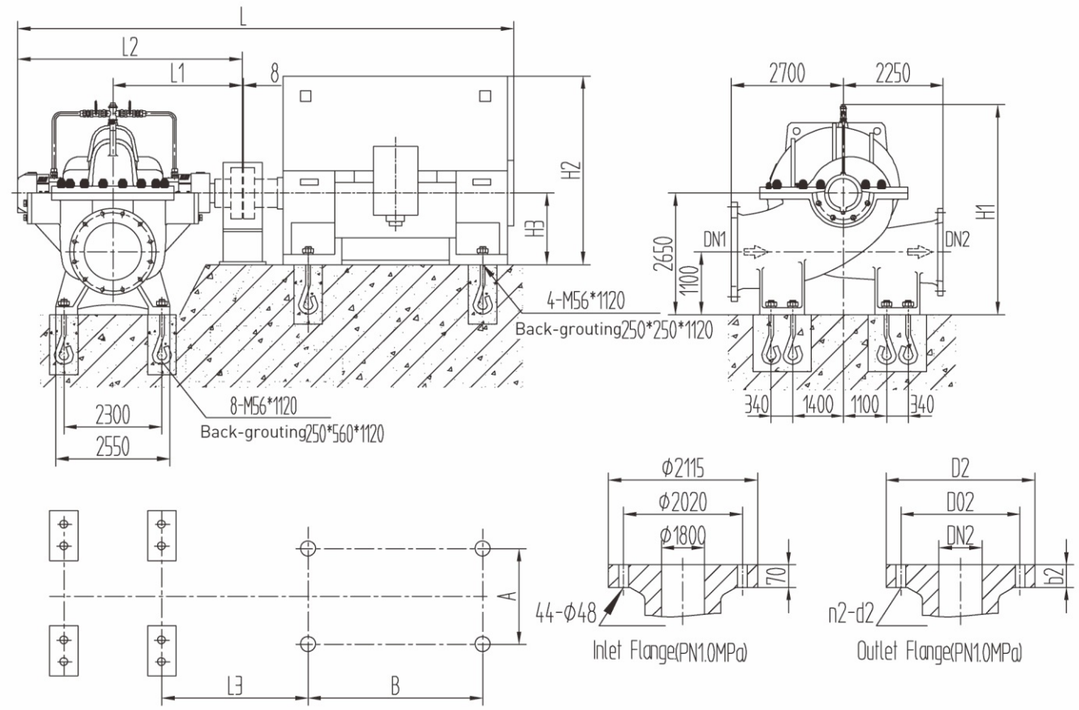

Installation Dimensions Table of Pump

Pump Type	Motor			Installation Dimensions (mm)														
	Type	Power kW	Volt. V	L	L1	L2	L3	A	B	H1	H2	H3	DN2	D02	D2	n2-d2	b2
GS1800-19(M)/16	Y1120-16	4500～5000	6000	9470	2540	4760	2460	2500	2800	4550	3550	1120	1600	1820	1915	40-Φ48	68
	Y1000-16	3150～4000	6000	8940	2540	4760	2420	2000	2500	4550	3150	1000	1600	1820	1915	40-Φ48	68
	Y1120-16	4000～5000	10000	9470	2540	4760	2460	2500	2800	4550	3550	1120	1600	1820	1915	40-Φ48	68
	Y1000-16	3150～3550	10000	8940	2540	4760	2420	2000	2500	4550	3150	1000	1600	1820	1915	40-Φ48	68
GS1800-23(M)/16	Y1000-16	2800～4000	6000	8790	2440	4610	2320	2000	2500	4410	3150	1000	1600	1820	1915	40-Φ48	68
	Y1120-16	4000	10000	9320	2440	4610	2360	2500	2800	4410	3550	1120	1600	1820	1915	40-Φ48	68
	Y1000-16	2800～3550	10000	8790	2440	4610	2320	2000	2500	4410	3150	1000	1600	1820	1915	40-Φ48	68
GS1800-27(M)/16	Y1000-16	2240～3550	6000	8790	2440	4610	2320	2000	2500	3850	3150	1000	1800	2020	2115	44-Φ48	70
	Y1000-16	2240～3550	10000	8790	2440	4610	2320	2000	2500	3850	3150	1000	1800	2020	2115	44-Φ48	70

Ordering Instructions

1. Please provide the following information when placing an order.

① Pump model or working conditions data: Capacity, Head and NPSH (net positive suction head) ect.

② Medium: working temperature, corrosive or other physical & chemical properties(temperature > 80℃, cooling structure will be adopted for bearing, The material of casing & cover is QT500–7)

③ Pump inlet pressure.(pressure > 0.3Mpa, The material of casing & cover is QT500–7)

④ Type of shaft seal (Users have three choices: non asbestos soft packing, mechanical seals and injection type soft packing. If not to specify it, packing will be supplied.)

⑤ Direction of rotation (Counterclockwise rotation is special. If not to indicate direction, clockwise rotation is to be provided.)

⑥ Parts material (If not to specify material, pump will be supplied according to standard material)

⑦ Motor requirements: power, voltage, protection class, insulation class, cooling method, anti–explosion or not etc.

⑧ Common base (Standard configuration: When motor support number ≤315 and pump suction diameter ≤350, scope of supply shall include common base.Beyond the above scope, it is necessary to specify whether you need pump base or common base when ordering.)

2. Model Selection Instructions

① The order is not limited by the performance parameters list. Data in the catalogue is only special point parameters. We can design and manufacture the product according to the user requirements.

② If selected model is close to performance parameters, generally standard impeller pumps and high speed pumps are preferred. (To select high speed pumps, NPSH shall meet the requirements.)

③ For specific speed of 40, 60 and 90 low specific speed pumps, if selected product is not running on large flow and low head operation conditions, motor can be calculated according to the actual operating points and appropriately reduced.

④ Pump can be of speed down running. But generally exceeding rated speed acceleration running is not allowed.

3. If you have any queries about special type selection that is beyond content in pump catalogue (for example, deceleration running), please feel free to consult our technical center.

4. Special Notice: The Company holds the rights to revise the data in the catalogue without any prior warning. Therefore, users have to contact and confirm with our technical center before making the foundation. Dimension drawings shall come into effect with signature or seal.