LSW
Sewage Submersible Pump

Application

- LSW series submersible sewage pumps are suitable for buildings, hospitals, residential quarters, municipal engineering, road traffic and construction, factory sewage, sewage treatment, and other occasions. It is used to discharge wastewater, rainwater, and sewage containing solid particles.

Pump

- Stainless steel shell
- Cast Iron Pump body with special anti-rust treatment
- Fixed cable with unique design
- AISI 304 shaft
- Max.liquid temperature:40°C

Motor

- Motor with copper winding
- Built-in thermal protector for single phase motor
- Insulation class:F
- Protection class: IPX8

Identification Codes

LSW m 75 A

- A — Automatic Operation with Float Switch
- 75 — Power (HP X 100)
- m — Single Phase Motor (Omitted for three-phase motor)
- LSW — Sewage Submersible Pump

Technical Data

Model	Power		Voltage/Frequency	Outlet	Q.Max	H.Max	Max.dia. of praticle
	kW	HP	V/Hz		m³/h	m	mm
LSWm25(A)	0.18	0.25	180-220/50	G1.5	11	8	15
LSWm30(A)	0.25	0.37	180-220/50	G1.5	12	9	15
LSWm50(A)	0.37	0.5	180-220/50	G1.5	13	11	20
LSWm75(A)	0.55	0.75	180-220/50	G2	16	13.5	25
LSWm100(A)	0.75	1.0	180-220/50	G2	19	17	25
LSWm150(A)	1.1	1.5	180-220/50	G2	26	13.5	30
LSWm200(A)	1.5	2.0	180-220/50	G2	32	19	30
LSWm300(A)	2.2	3	180-220/50	G2	34.5	23	30

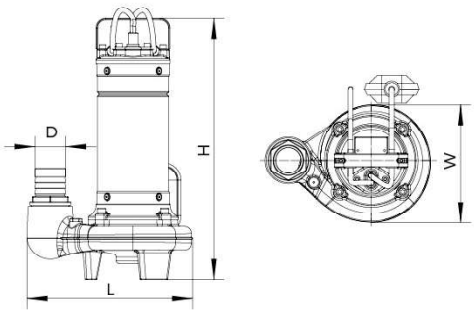

Dimension

Model	D (mm)	L (mm)	W (mm)	H (mm)
LSWm25(A)	G1.5/40	221	158	362
LSWm30(A)	G1.5/40	221	158	362
LSWm50(A)	G1.5/40	221	158	372
LSWm75(A)	G2/50	260	185	410
LSWm100(A)	G2/50	260	185	410
LSWm150(A)	G2/50	269	186	450
LSWm200(A)	G2/50	269	186	470
LSWm300(A)	G2/50	269	186	470

LSW
Sewage Submersible Pump

Application

- LSW series submersible sewage pumps are suitable for buildings, hospitals, residential quarters, municipal engineering, road traffic and construction, factory sewage, sewage treatment, and other occasions. It is used to discharge wastewater, rainwater, and sewage containing solid particles.

Pump

- Stainless steel shell
- Cast Iron Pump body with special anti-rust treatment
- Fixed cable with unique design
- AISI 304 shaft
- Max.liquid temperature:40°C

Motor

- Motor with copper winding
- Built-in thermal protector for single phase motor
- Insulation class:F
- Protection class: IPX8

Identification Codes

LSW m 75 C A

- A — Automatic Operation with Float Switch
- C — Cutting Blade
- 75 — Power (HP X 100)
- m — Single Phase Motor (Omitted for three-phase motor)
- LSW — Sewage Submersible Pump

Technical Data

Model	Power		Voltage/Frequency	Outlet	Q.Max	H.Max
	kW	HP	V/Hz		m³/h	m
LSWm100CA	0.75	1.0	180-220/50	G2	15	13
LSWm150CA	1.1	1.5	180-220/50	G2	25	14
LSWm200CA	1.5	2.0	180-220/50	G2	30	17
LSWm300CA	2.2	3.0	180-220/50	G2	32	21.5

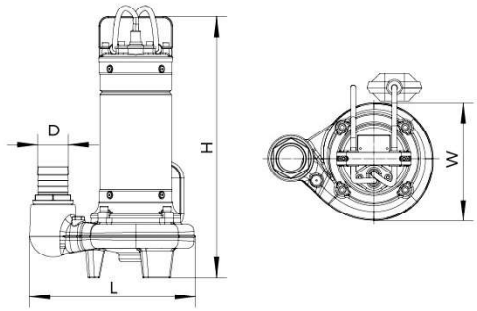

Dimension

Model	D (mm)	L (mm)	W (mm)	H (mm)
LSWm100CA	G2/50	260	185	403
LSWm150CA	G2/50	269	186	446
LSWm200CA	G2/50	269	186	460
LSWm300CA	G2/50	269	186	480