ELECTRIC BILGE PUMP

INSTRUCTIONS FOR USE

16014112 - UP1600 12V

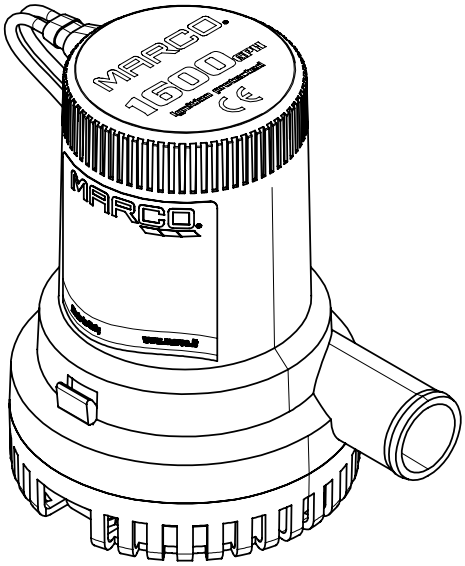

CE

11/10/2026

© MARCO S.p.A.

© MARCO S.p.A.

END USER SAFETY INFORMATION – READ BEFORE INSTALLATION

Informazioni di sicurezza per l'utente finale – Leggere prima dell'installazione.
Sicherheitshinweise für den Endnutzer – Vor der Installation lesen.
Informations de sécurité pour l'utilisateur final – Lire avant l'installation.
Información de seguridad para el usuario final – Leer antes de la instalación.
Informações de segurança para o utilizador final – Ler antes da instalação.

This pump shall be installed, operated and maintained only by qualified personnel in accordance with the instructions. Non-compliance may result in electric shock, fire, serious injury or death.

IT: La pompa deve essere installata, utilizzata e manutenuta solo da personale qualificato secondo le istruzioni. Il mancato rispetto può causare folgorazione, incendio, lesioni gravi o morte.
DE: Die Pumpe darf nur von qualifiziertem Personal gemäß der Anleitung installiert, betrieben und gewartet werden. Nichteinhaltung kann zu Elektroschock, Brand, schweren Verletzungen oder Tod führen.
FR: La pompe ne doit être installée, utilisée et entretenue que par du personnel qualifié conformément aux instructions. Le non-respect peut entraîner électrocution, incendie, blessures graves ou mort.
ES: La bomba solo debe ser instalada, operada y mantenida por personal cualificado según las instrucciones. El incumplimiento puede provocar descarga eléctrica, incendio, lesiones graves o muerte.
PT: A bomba deve ser instalada, operada e mantida apenas por pessoal qualificado, de acordo com as instruções. O incumprimento pode causar choque eléctrico, incêndio, ferimentos graves ou morte.

Intended use. This pump is designed exclusively for pumping fresh water and salt water at ambient temperature.

IT: Questa pompa è progettata esclusivamente per acqua dolce e acqua salata a temperatura ambiente.
DE: Diese Pumpe ist ausschließlich für S"ußwasser und Salzwasser bei Umgebungstemperatur ausgelegt.
FR: Cette pompe est conçue exclusivement pour l'eau douce et l'eau sal'ee à température ambiante.
ES: Esta bomba está diseñada exclusivamente para agua dulce y agua salada a temperatura ambiente.
PT: Esta bomba foi concebida exclusivamente para 'agua doce e 'agua salgada à temperatura ambiente.

Prohibited use. Do not use with solvents, chemical or corrosive agents, or flammable liquids. Do not use in potentially explosive atmospheres. This product is not ATEX certified. Risk of explosion, fire and serious injury.

IT: Non utilizzare con solventi, agenti chimici o corrosivi, o liquidi infiammabili. Non utilizzare in atmosfere potenzialmente esplosive. Il prodotto non è certificato ATEX. Rischio di esplosione, incendio e lesioni gravi.
DE: Nicht mit Lösungsmitteln, chemischen oder korrosiven Stoffen oder brennbaren Flüssigkeiten verwenden. Nicht in explosionsgefährdeter Atmosphäre verwenden. Das Produkt ist nicht ATEX-zertifiziert. Explosions-, Brand- und Verletzungsgefahr.
FR: Ne pas utiliser avec des solvants, des agents chimiques ou corrosifs, ni des liquides inflammables. Ne pas utiliser en atmosphère potentiellement explosive. Ce produit n'est pas certifié ATEX. Risque d'explosion, d'incendie et de blessures graves.
ES: No utilizar con disolventes, agentes químicos o corrosivos, ni líquidos inflamables. No utilizar en atmósferas potencialmente explosivas. Este producto no está certificado ATEX. Riesgo de explosión, incendio y lesiones graves.
PT: Não utilizar com solventes, agentes químicos ou corrosivos, nem líquidos inflamáveis. Não utilizar em atmosferas potencialmente explosivas. O produto não é certificado ATEX. Risco de explosão, incêndio e lesões graves.

High temperature. The motor and pump may reach high surface temperatures during or after operation. Avoid contact.

IT: Il motore e la pompa possono raggiungere elevate temperature superficiali durante o dopo il funzionamento. Evitare il contatto.
DE: Motor und Pumpe können während oder nach dem Betrieb hohe Oberflächentemperaturen erreichen. Kontakt vermeiden.
FR: Le moteur et la pompe peuvent atteindre des températures de surface élevées pendant ou après le fonctionnement. Éviter tout contact.
ES: El motor y la bomba pueden alcanzar temperaturas superficiales elevadas durante o después del funcionamiento. Evitar el contacto.
PT: O motor e a bomba podem atingir temperaturas superficiais elevadas durante ou após o funcionamento. Evitar o contacto.

Isolation from supply. Before any installation, inspection, cleaning or maintenance, disconnect the pump from the mains supply.

IT: Prima di installazione, ispezione, pulizia o manutenzione, disconnettere la pompa dalla rete.
DE: Vor Installation, Prüfung, Reinigung oder Wartung die Pumpe vom Netz trennen.

© MARCO S.p.A.

FR: Avant toute installation, inspection, nettoyage ou maintenance, débrancher la pompa du réseau.
ES: Antes de cualquier instalación, inspección, limpieza o mantenimiento, desconectar la bomba de la red.
PT: Antes de qualquer instalação, inspeção, limpeza ou manutenção, desligar a bomba da rede.

Protective covers. Do not remove the protective covers while the motor is in operation.
IT: Non rimuovere le protezioni mentre il motore è in funzione.
DE: Schutzabdeckungen nicht entfernen, während der Motor in Betrieb ist.
FR: Ne pas retirer les protections pendant que le moteur est en marche.
ES: No retirar las protecciones mientras el motor está en funcionamiento.
PT: Não remover as proteções enquanto o motor estiver em funcionamento.

Moving parts. Do not insert fingers or objects into moving parts (e.g. drive or gears).
IT: Non inserire dita o oggetti nelle parti in movimento (es. trasmissione o ingranaggi).
DE: Keine Finger oder Gegenstände in bewegte Teile (z. B. Antrieb oder Getriebe) einführen.
FR: Ne pas introduire doigts ou objets dans les pièces en mouvement (ex. transmission ou engrenages).
ES: No introducir dedos u objetos en partes móviles (ej. transmisión o engranajes).
PT: Não introduzir dedos ou objectos em partes em movimento (ex. transmissão ou engrenagens).

Electrical installation. Install a correctly rated fuse and switch in accordance with the pump electrical specifications. Protect cables from mechanical damage, heat and moisture.
IT: Installare fusibile e interruttore adeguati secondo le specifiche elettriche della pompa. Proteggere i cavi da danni meccanici, calore e umidità.
DE: Sicherung und Schalter gemäß den elektrischen Daten der Pumpe einbauen. Kabel vor mechanischer Beschädigung, Hitze und Feuchtigkeit schützen.
FR: Installer un fusible et un interrupteur adaptés selon les spécifications électriques de la pompe. Protéger les câbles des dommages mécaniques, chaleur et humidité.
ES: Instalar fusible e interruptor adecuados según las especificaciones eléctricas de la bomba. Proteger los cables de daños mecánicos, calor y humedad.
PT: Instalar fusível e interruptor adequados conforme às especificações eléctricas da bomba. Proteger os cabos de danos mecânicos, calor e humidade.

No modifications. Do not modify the pump or its electrical connections.
IT: Non modificare la pompa né le sue connessioni elettriche.
DE: Pumpe und elektrische Anschlüsse nicht verändern.
FR: Ne pas modifier la pompe ni ses connexions électriques.
ES: No modificar la bomba ni sus conexiones eléctricas.
PT: Não modificar a bomba nem as suas ligações eléctricas.

Cable sizing. Size the cable section correctly according to cable length, in compliance with local regulations.
IT: Dimensionare correttamente la sezione dei cavi in funzione della loro lunghezza, in conformità con le normative locali.
DE: Kabelquerschnitt in Abhängigkeit der Kabellänge korrekt dimensionieren, in Übereinstimmung mit den lokalen Vorschriften.
FR: Dimensionner correctement la section des câbles en fonction de leur longueur, conformément à la réglementation locale.
ES: Dimensionar correctamente la sección de los cables según su longitud, de conformidad con la normativa local.
PT: Dimensionar correctamente a secção dos cabos em função do seu comprimento, em conformidade com a regulamentação local.

© MARCO S.p.A.

DESCRIPTION

The new UP1600 submersible pump, available in 12V and 24V versions, represents a technological upgrade for marine applications and is designed to ensure high performance, stable operation, and long service life even under the most demanding onboard conditions.

The mechanically sealed pump body, assembled with screws and O-rings instead of welds, ensures reliable sealing over time, greater resistance to vibrations and thermal cycles, and more accurate quality control during production, making the pump particularly robust and durable in the marine environment.

Hydraulic optimization, achieved through the redesign of the impeller and the suction channel, improves fluid flow, prevents cavitation and air bubble formation, and ensures constant flow rate and smooth operation, even under non-ideal suction conditions.

The UP1600 delivers quiet and smooth performance with reduced vibrations, contributing to onboard comfort. Designed for simplified OEM integration, it is ideal for both recreational and professional vessels. ISO 8849 and ISO 8846 certified.

TECHNICAL DETAILS

PRODUCT DATA				
CODE	TYPE	DESCRIPTION	WEIGHT	
16014112	UP1600	UP1600 Submersible pump 100 l/min	kg	1,1
			lb	2.4

MOTOR DATA						
VOLTAGE [V]	MAX AMPERAGE [A]	FUSE [A]	MOTOR POWER [W]	IP PROTECTION	WIRE	
12 DC	8	12	120	67	mm^2	0.75
					AWG	18

PUMP DATA					
SELF-PRIMING [m]	MAX FLOW RATE [l/min]	MAX PRESSURE [bar]	HOSE [mm]	SEAL	O-RING
-	100	0,4	30	NBR	NBR

PUMP DATA (USA)					
SELF-PRIMING [ft]	MAX FLOW RATE [gpm]	MAX PRESSURE [psi]	HOSE [in]	SEAL	O-RING
-	26.4	5.8	1.2	NBR	NBR

FLUIDS ALLOWED / NOT ALLOWED

LIQUIDS		***DANGERS*** ⚠				
WARRANTY EXPIRES IF MAX FLUID TEMPERATURE IS EXCEEDED		FIRE / EXPLOSION	MOTOR OVERHEATING	PUMP CORROSION	INJURY TO PERSONNEL	DAMAGE TO SEALS
OK	WATER (max 43 °C)					
NO	PETROL (GASOLINE)	●			●	
	SOLVENTS	●			●	●
	FLAMMABLE LIQUIDS with PM < 38 °C	●				
	LIQUIDS WITH VISCOSITY > 20 cSt		●			
	CORROSIVE CHEMICAL PRODUCTS			●	●	●
ISO 8846 Compliant Device						

© MARCO S.p.A.

WIRING DIAGRAM

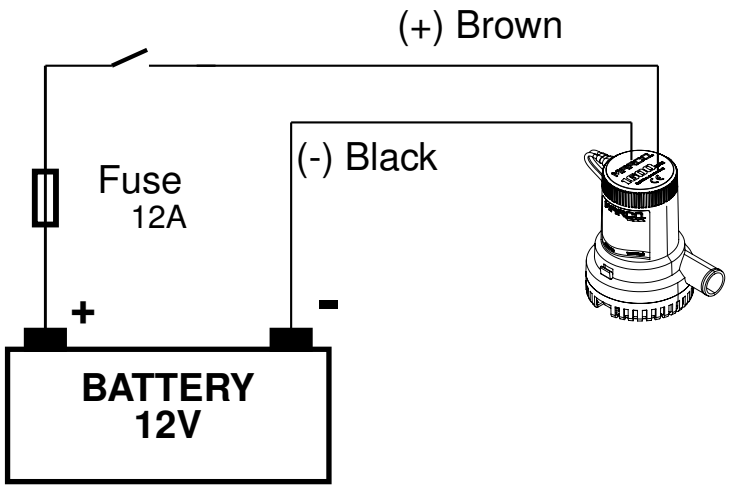

WARNING

This pump is designed for use with fresh and salt water only. Use with any other medium, including particularly hazardous, caustic or corrosive substances, could result in damage to the pump, the surrounding environment and injury to persons or property, including possible exposure to hazardous substances.

MOUNTING

Disassemble as follows:

⇒ Lift the white power module out of the blue strainer

⇒ Fix strainer with stainless steel screws (screw holes on bottom of strainer).

⇒ Reassemble as follows: after mounting the blue strainer, insert the white power module onto the strainer.

PLUMBING

⇒ use correct bilge pump hose.

⇒ the hose run should be as short and steep as possible. This will help to eliminate air pockets which can cause air-locking.

⇒ attach all hoses to pumps with correct stainless steel hose clamps.

ELECTRICAL

⇒ brown (+) wire is positive and connects to the positive terminal of the battery. Black (-) wire is negative and connects to the negative terminal of the battery.

⇒ Installing the fuse is compulsory.

⇒ The electrical installation has to be done in a dry place in order to avoid contact with water.

WARRANTY

1. The Warranty period is 2 years from date of purchase on production of the appropriate sales invoice.
2. Should the original sales invoice not be available, then the 2 year warranty period will be valid from production date.
3. The Warranty becomes null and void in the case of incorrect utilization or disregard of the instructions contained herein.
4. The Warranty only covers original production defects.
5. The Warranty does not cover any related installation costs involved.
6. Transport costs are refundable only in the case where warranty has been duly accepted by MARCO Spa and they will be limited to the actual shipment costs between MARCO Spa warehouse and the client's delivery address.
7. No credit notes or replacement items will be issued prior to the receipt and proper testing of any MARCO goods that are deemed faulty.

© MARCO S.p.A.

EXPLODED VIEW

Pos.	Q.tà	Descrizione	Description	Ricambio Spare Part
1	1	MOTORE POMPA	PUMP MOTOR	
2	1	GRIGLIA POMPA	PUMP GRID	

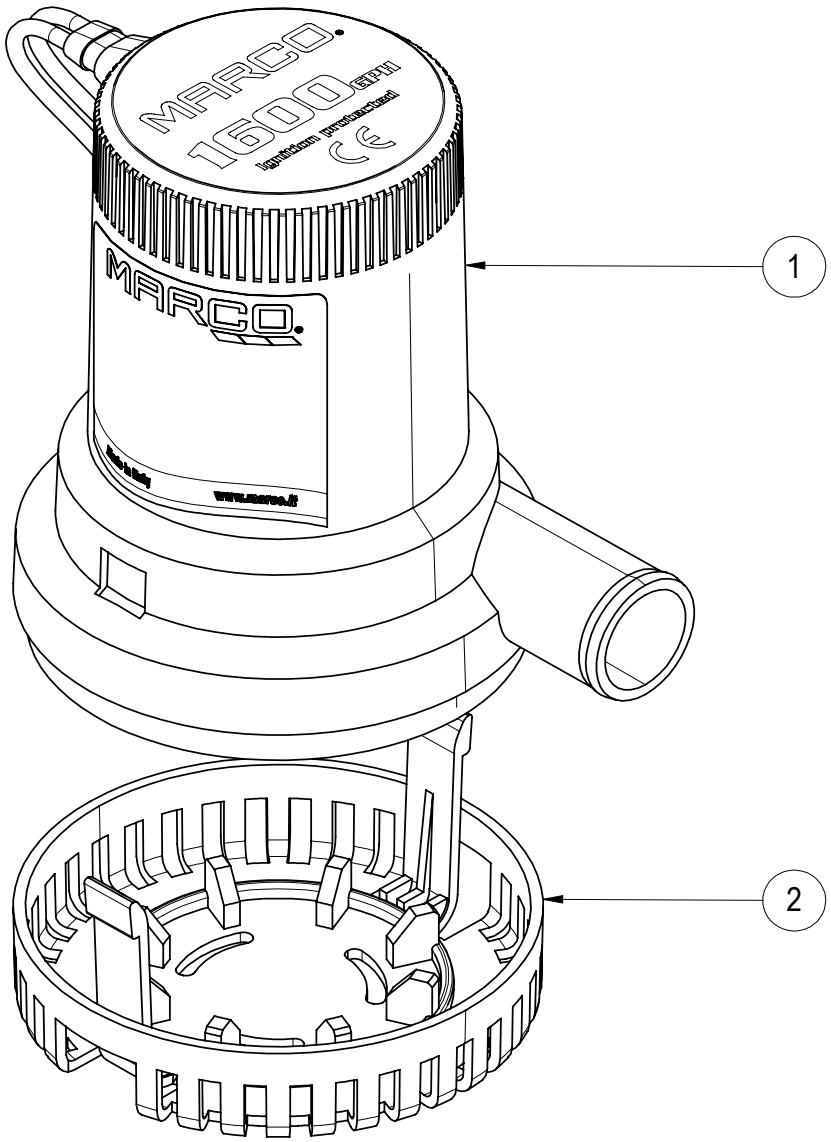

© MARCO S.p.A.

DIMENSIONS

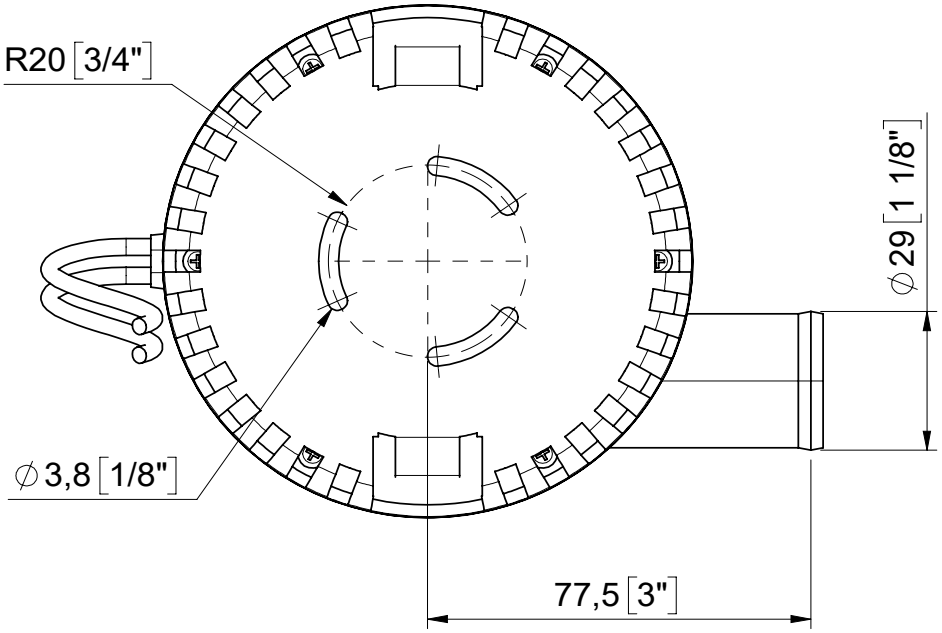

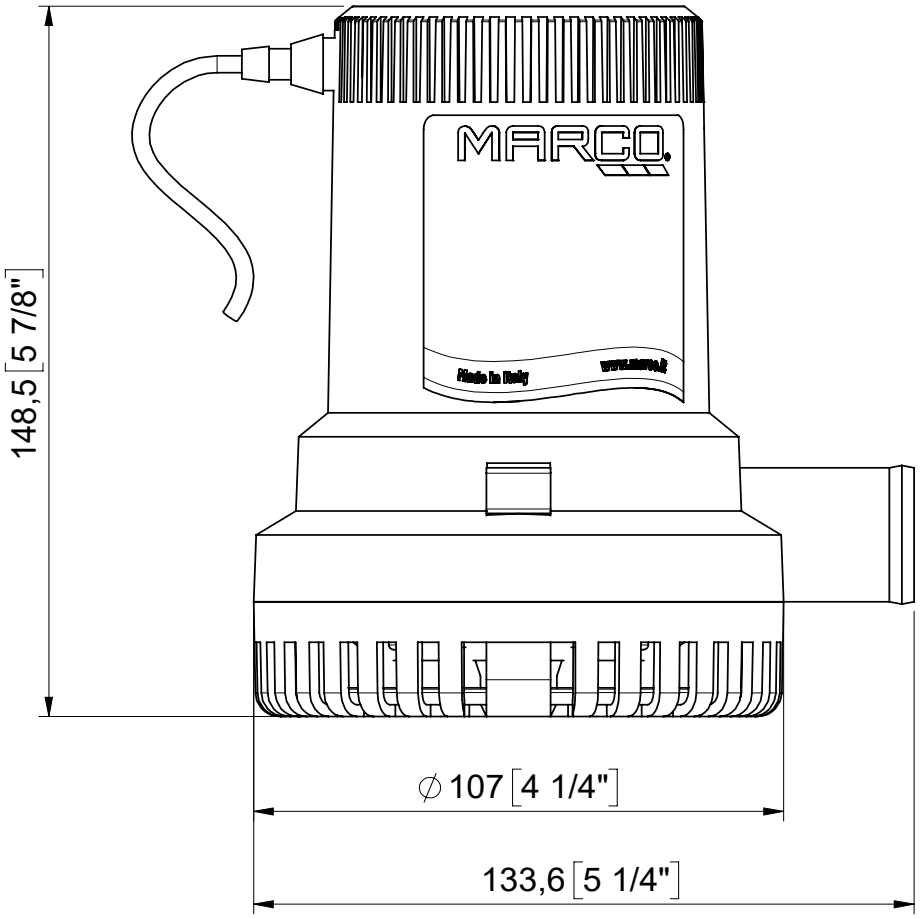

© MARCO S.p.A.

DIAGRAMS

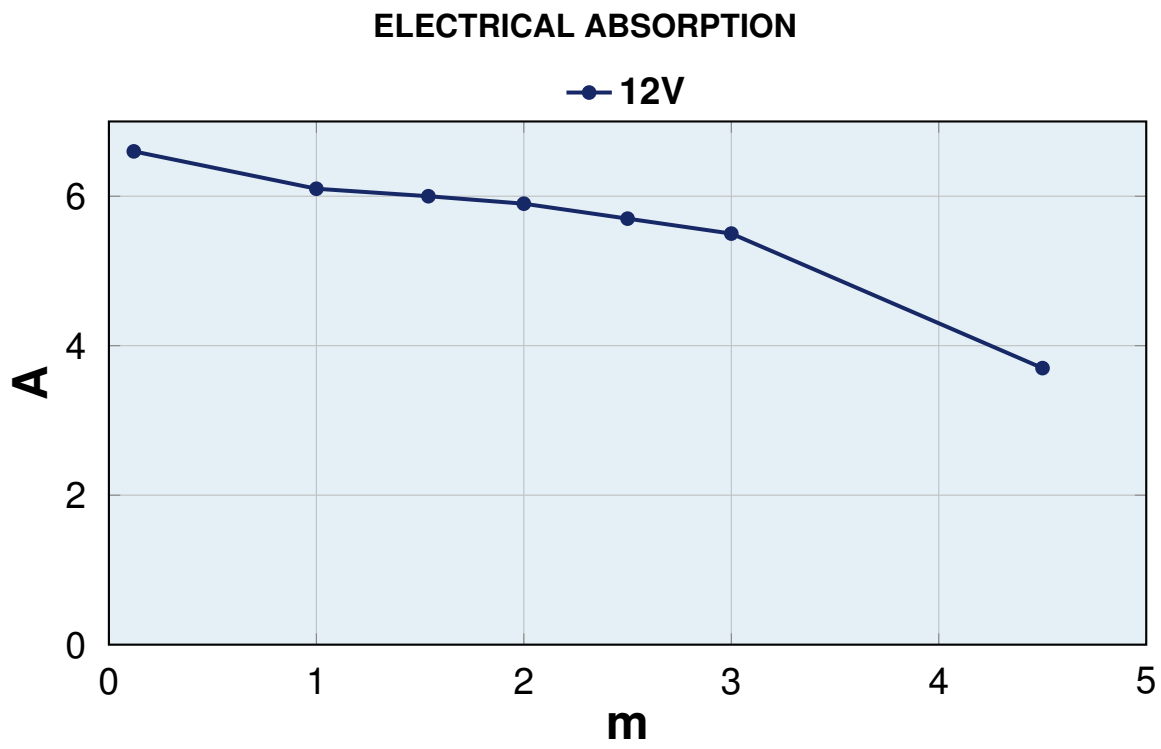

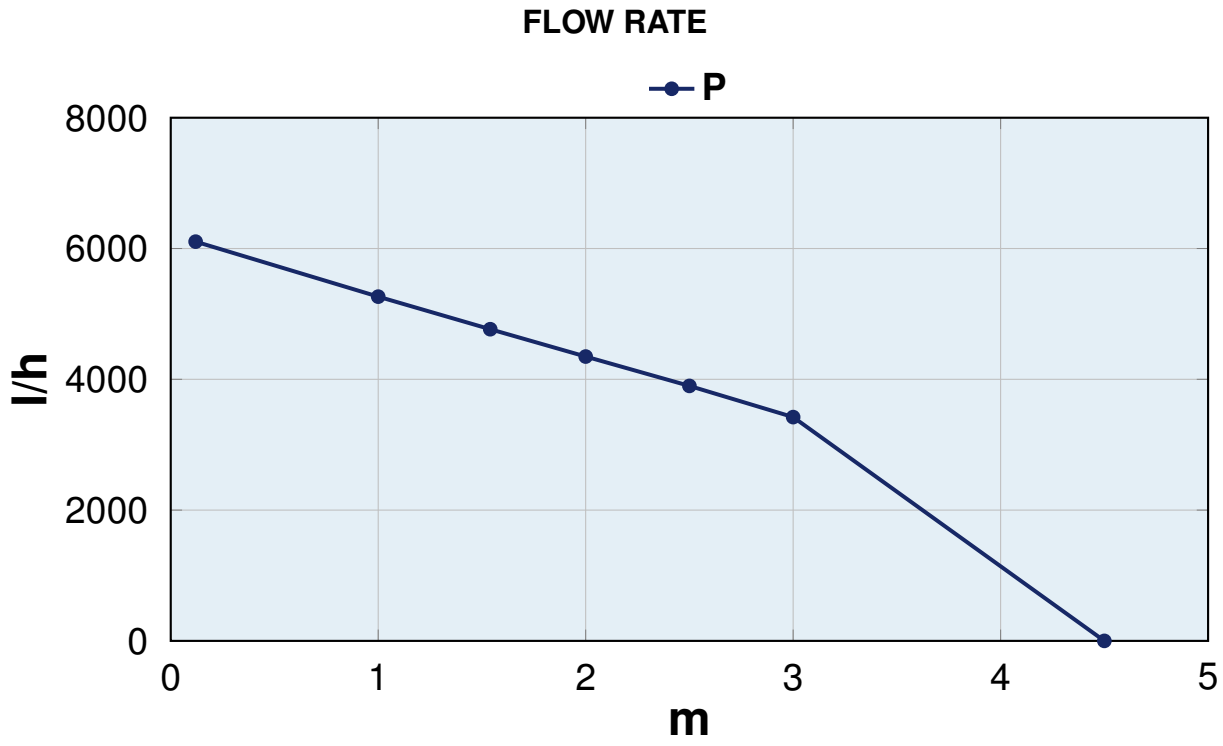

© MARCO S.p.A.

DIAGRAMS

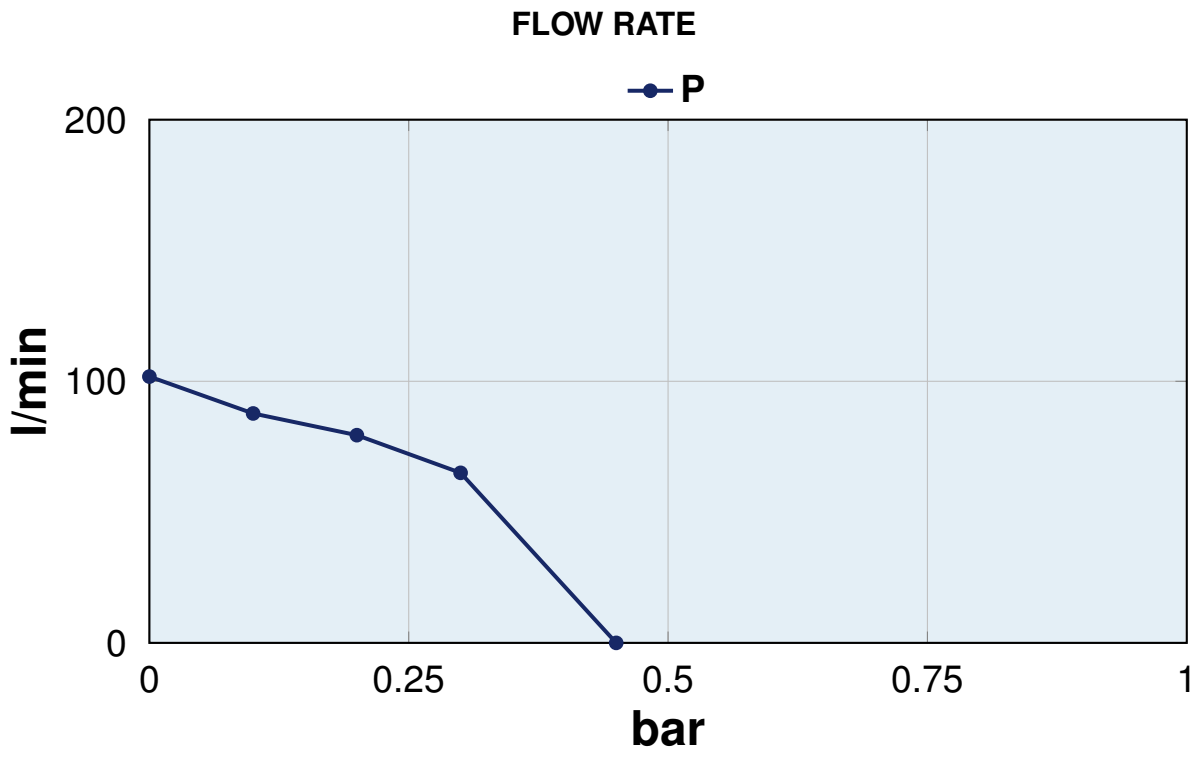

© MARCO S.p.A.

E.C. DECLARATION OF CONFORMITY

We confirm that the product:

16014112 - UP1600 Submersible pump 100 l/min / *bilge pump*

is in conformity with the Directive 2014/30/EU (ex.2004/108/EC) relating to electromagnetic compatibility and with the Directive 2006/42/EC relating to the machines.

This declaration is valid for all products which are produced in accordance with the technical documentation which is a part of this declaration. For verification of conformity with regard to the Electromagnetic Compatibility the following standards are applied:

EN 55014-1	Electromagnetic compatibility. Requirements for household appliances, electric tools, and similar apparatus. Part 1: Emission.

This declaration is given under the sole responsibility of:

MARCO S.P.A.
Via Mameli 10 - 25014 Castenedolo - Brescia - Italy
Tel. 030/2134.1 Fax 030/2134.300

© MARCO S.p.A.

© MARCO S.p.A.

Italiano

English

Property of MARCO S.p.A reproduction prohibited.
All rights reserved.
For further information visit our web site - www.marco.it
MARCO S.p.A Via Mameli 10 - 25014 Castenedolo (Brescia) - Italy
tel. +39 030 2134.1 / Fax +39 030 2134.300

© MARCO S.p.A.